BATWALL2410LIP

24x10W RGBW Battery LED Washer

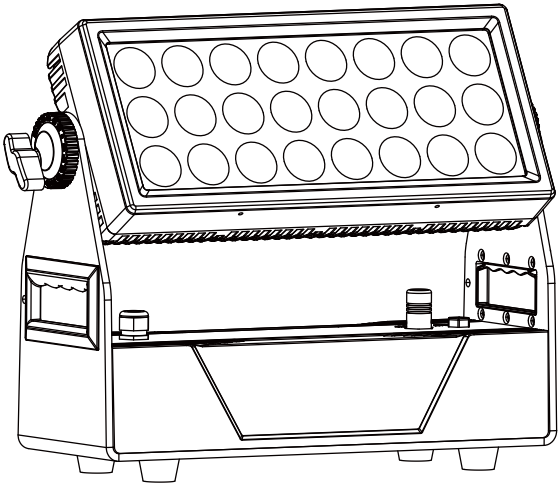

USER MANUAL

Safety Introduction Battery Color Kid

Before you operate this unit read the manual carefully. Always make sure to include the manual if you pass/rent/sell the unit to another user. Keep in mind that this manual cannot address all possible dangers and environments. Please use your own caution when operating. This product is for professional use only. It is not for household use.

•Do not operate the unit in areas of high temperature conditions. It will cause abnormal function or damage the product.
•Always use a suitable safety wire when mounting the light overhead.
•Connect the safety wire only to the intended safety mount.
• Always follow local safety requirements.

•Only qualified personnel may repair this product.
•Do not open the product housing.
•Do not apply power if the light is damaged.

•Do not directly look into the light.
•It can cause harm to your eyes.
•Do not look at the LEDs with a magnifying glass or any other optical instrument that may concentrate the light output.
•Please don't look at the light directly when the light's radiation temperature reach 40℃

•The exterior surfaces of the light can become hot, up to 55°C during normal operation.
•Ensure that accidental physical contact with the device is impossible.
• Install only in ventilated locations.
•Do not cover the light.

•Always charge with the flight case open.
• It is recommended to charge at a temperature between 15°C and 35°C

•Don't throw the unit into the garbage at the end of its lifetime.
• Make sure to dispose is according to your local ordinances and/or regulations, to avoid polluting the environment!
•The packaging is recyclable and can be disposed.

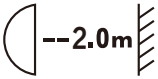

ta 45 °C

Product Overview

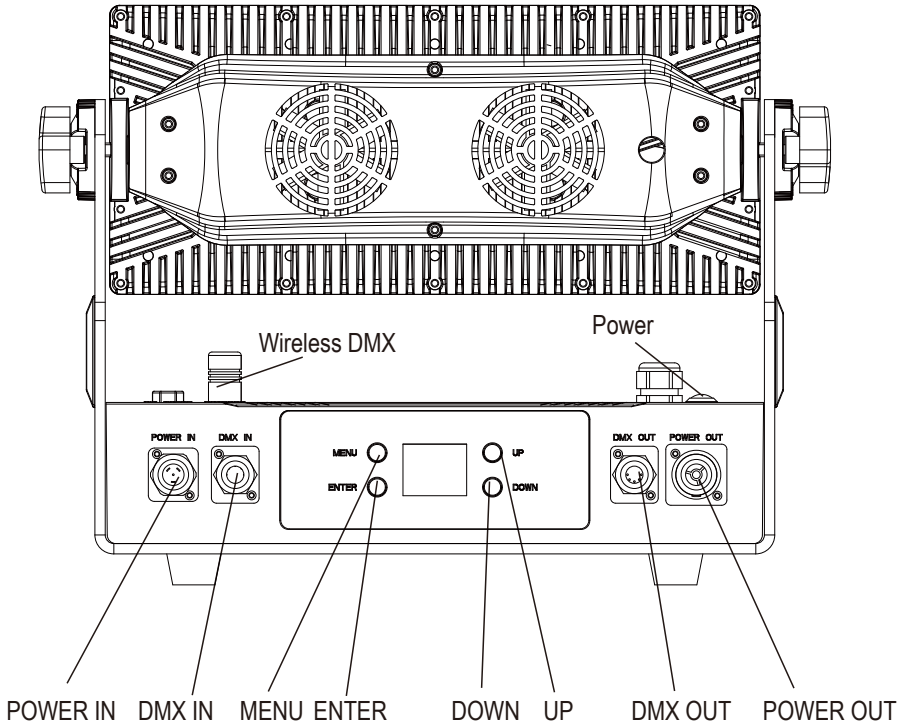

Mechanical Specification

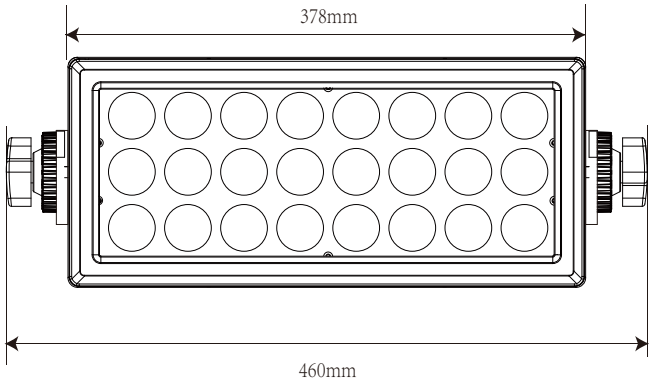

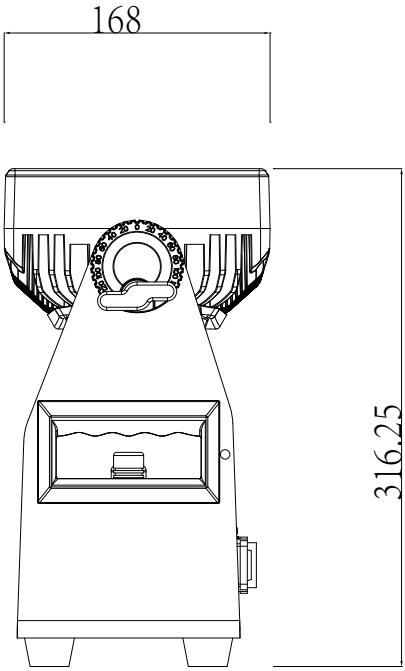

Accessory

① Magnetic frost filter (40° / 60 x 10°) x 1
② Barndoor x 1
③ 1/4 turn fast lock x 1
④ Power cable x 1
⑤ User manual x 1

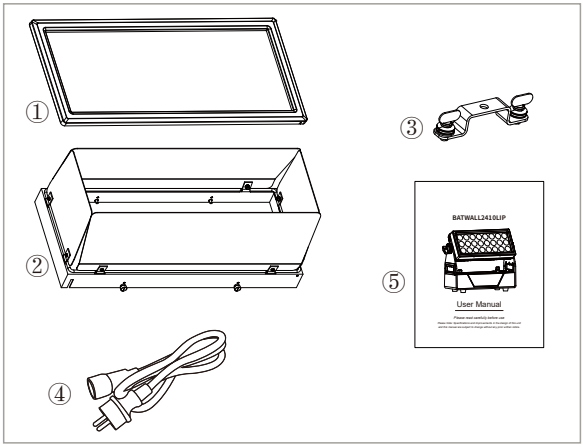

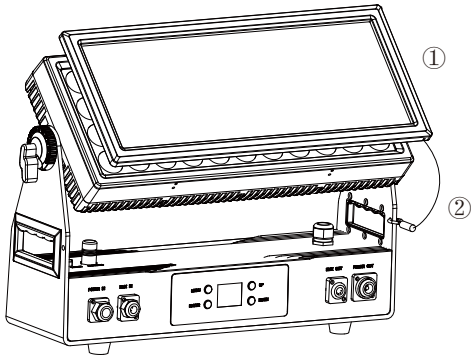

If you want to set up the magnetic frost filter,please follow the steps as below:

1. Please put the magnetic frost filter onto the top cover of the lights.Please don't worried about the filter will be fallen down,because the top cover and the filter are have magnets.

2. Please put the hook of the safety rope hangs on the hole of the handle of the light.Please make sure the safety rope on the side of the screen then the hook can be hung.

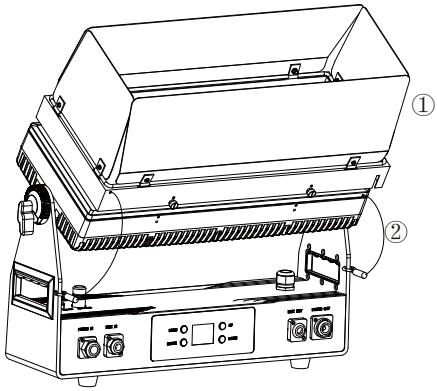

If you want to set up the barndoor,please follow the steps as below:

1. There are 4 holes on the top cover of the lights,please put the screws of the barndoor to connect these 4 holes then tighten them.

2. Please put the hooks of the two safety ropes hang on the holes of the handles of the light.Please make sure the safety rope on the side of the screen then the hook can be hung.

Displayer Introduction

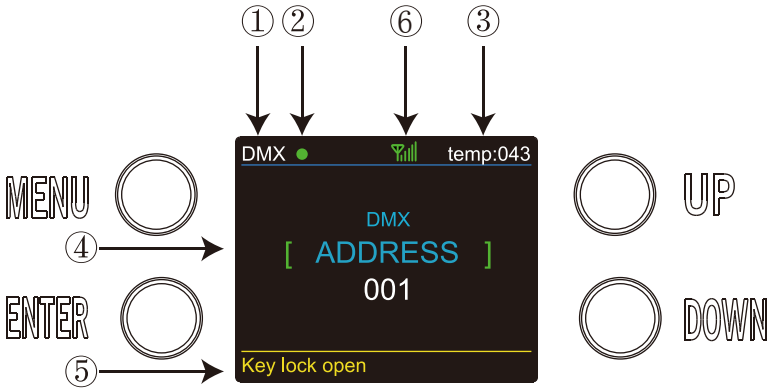

1. When you enter DMX Mode,it will be showed DMX,when you enter SLAVE Mode,it will be showed SLAVE.
2. This shows the condition of signal transmission. Green is connected.Red is disconnected.
3. This shows the temperature of the lights.
4. This shows the menus you can select.
5. This shows the condition of key lock. “Key lock open” means it is open and “Key lock off” means it is close.
6. This shows the condition of wireless signal. Green is connected.Red is disconnected.

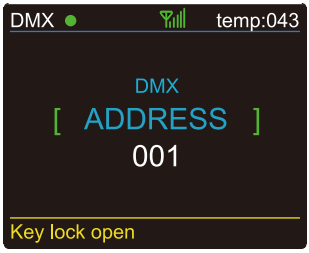

While DMX and Wireless signal are green,it means DMX Mode and Wireless are connected.

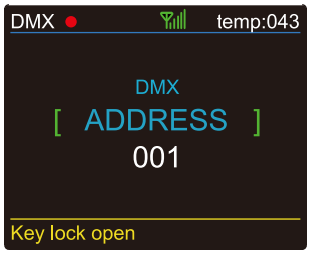

While DMX shows red but Wireless signal shows green,it means DMX Mode is disconnected and Wireless is connected.

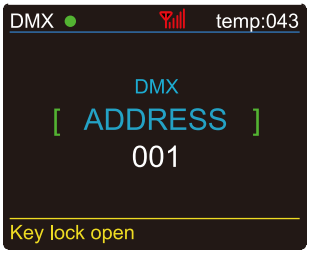

While DMX shows green but Wireless signal shows red,it means DMX Mode is connected and Wireless is disconnected.

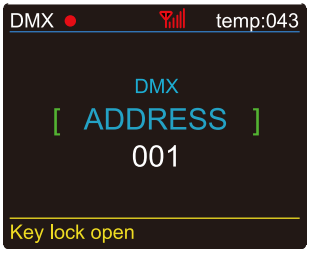

While DMX and Wireless are show red,it means DMX Mode and Wireless are disconnected.

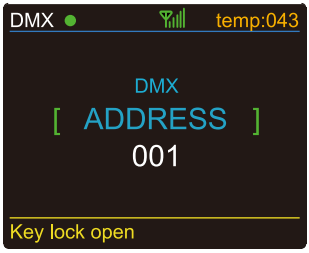

While the letters and number shows change from white to yellow,it means the temperature beyond max temperature of default settings.

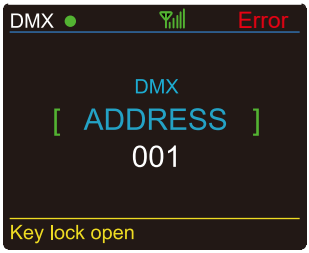

While the letters and number shows Error,it means have some problems of temperature.

APP Control operating method

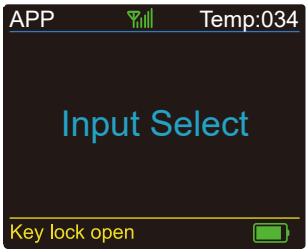

When the lamp is turned on, press the up or down button, find the Input Select option, and click enter

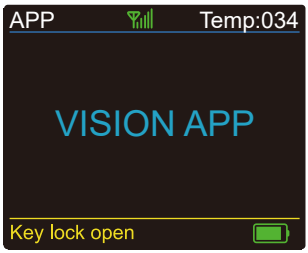

Click Enter to enter the VISION APP interface, and then click Enter

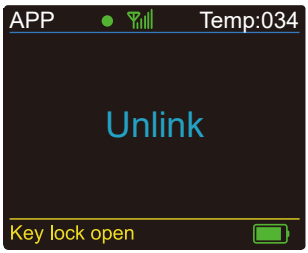

Click Enter to enter the Unlink interface, and then click Enter

App Download

Turn on the scanning function of the phone and scan the corresponding QR code to download the Vision control APP for use.

App Store	
Google Play	
Microsoft	

1. Log into the Google play store on your phone, search for Vision Control, and click Download to install.

2.Click the Vision APP to enter the login screen.

3.Click the Register button to enter the registration screen
1) Fill in all the contents on the registration page and click the registration button to submit information.
2) Then check your email for confirmation.
3) Click on the confirmation link provided in the email. After clicking the confirmation link, a success message will be displayed on the website. If you click the link a second time, an error message may appear; you can safely ignore it, as the confirmation was successful the first time.
4) Return to the Vision App and use your registered email and password to log in.
Note:For security reasons, it is recommended to keep your login credentials confidential.

The application is being prepared and the process may take some time.If there is no Internet connection at this stage, the application will not launch.Because it requires library information, it is not available without the Internet.Click “Next” to proceed.

1) Grant permission for Bluetooth by clicking “Request”.
2) A popup will open; click “Ok”.
3) Finally, click “Start”.

Mesh Networking

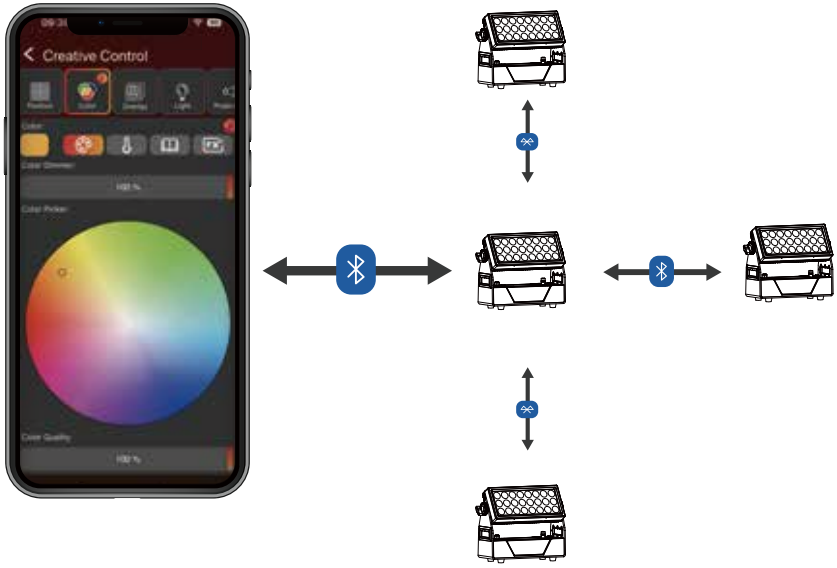

EASY INTERACTION WITH YOUR FIXTURE:
NFC support included

EFFORLESS FIXTURE SETUP PROCESS:
No knowledge of DMX/RDM required

LARGE EFFECT TEMPLATE LIBRARY:
Smooth background-Fast party effects

CONNECT TO YOUR NETWORK:
No seperate gateway required

FIXTURE TO FIXTURES COMMUNICATION:
Creating a powerful and robust network without range limitations

SYNCHRONIZED & FIXTURE TO FIXTURE EFFECTS:
Seamless Transition

REAL TIME CONTROL:
Control your fixtures without delay

ACCESSIBILITY FROM ANYWHERE:
Cloud synchronization for app & Fixture data

Features

OPTICALS

- Light Source: 24*10W, 4 in 1 RGBW LEDs
- Lens: 20° , 40°

ELECTRICAL

- Power consumption: 260W
- Voltage: 100-240V 50/60Hz or battery 22,2VDC – 16Ah
- Charging:4 hours
- Discharging:3 hours for full power

CONTROL

- DMX channels: 2, 3, 5, 8 & 11 CH
- Run Mode: DMX 512 /Master Slave/Auto Run
- Built-in Effect: color mixing, variable color chasing, strobing and fading.
- Maximum 66 ID setting for easy separately control
- Wireless DMX transceiver Wireless Solution

SOFTWARE

- 10 internal programs and 10 customerize programs
- 4 different dimming curve
- 11 internal programs and 11 customerize programs
- Smart temperature control
- Working time record
- IR Remote Controller

PHYSICAL

- Material: Aluminum body
- Painting: an-ti salt & an-ti UV
- TFT displayer with four buttons
- Key lock for buttons
- IP65
- Temperature: -40℃~45℃
- N.W: 12 KG
- G.W: 15 KG
- Dimensions: 460 x 168 x 314.5 mm

Programme Menu

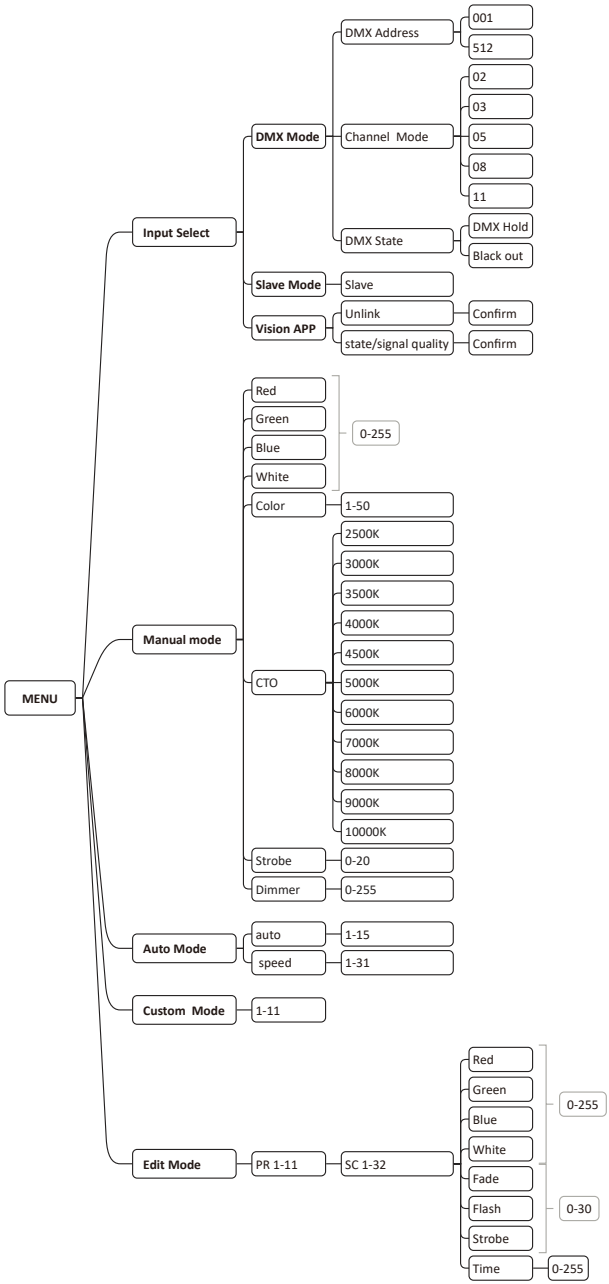

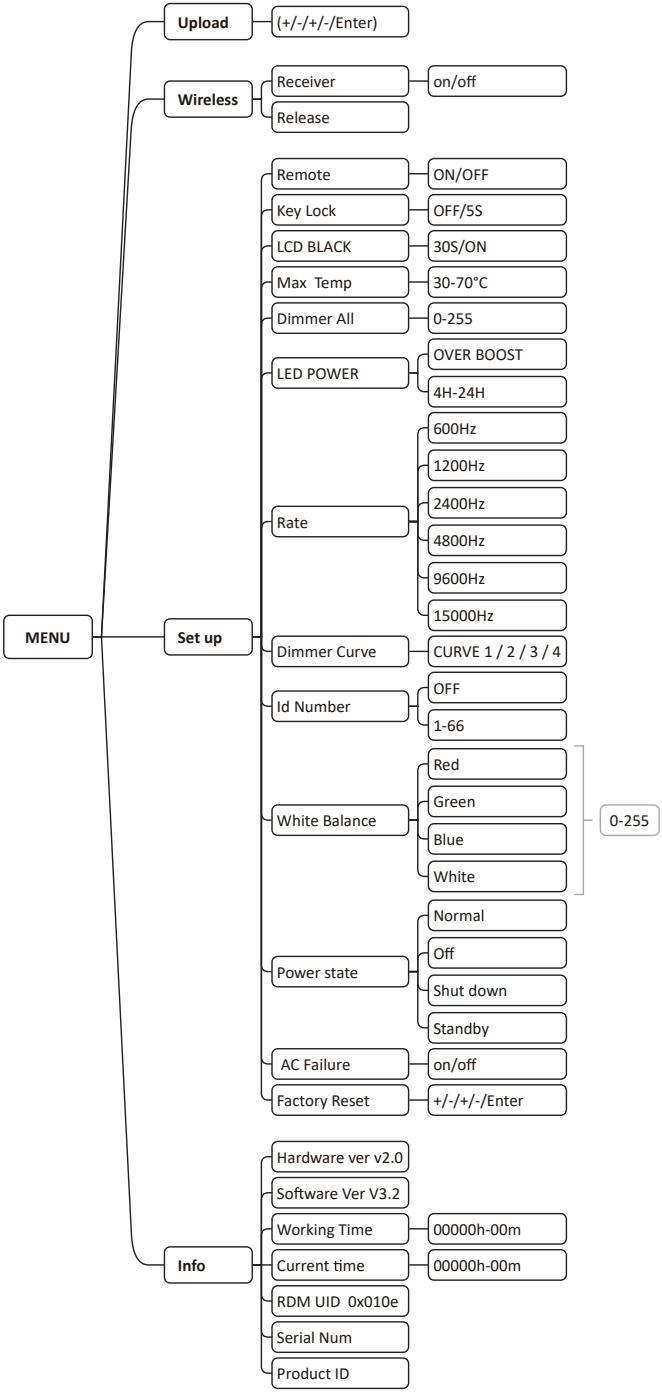
MENU
Upload
(+/-/+/-/Enter)
Wireless
Receiver
on/off
Release
Set up
Remote
ON/OFF
Key Lock
OFF/5S
LCD BLACK
30S/ON
Max Temp
30-70°C
Dimmer All
0-255
LED POWER
OVER BOOST
4H-24H
Rate
600Hz
1200Hz
2400Hz
4800Hz
9600Hz
15000Hz
Dimmer Curve
CURVE 1 / 2 / 3 / 4
Id Number
OFF
1-66
White Balance
Red
Green
Blue
White
0-255
Power state
Normal
Off
Shut down
Standby
AC Failure
on/off
Factory Reset
+/-/+/-/Enter
Info
Hardware ver v2.0
Software Ver V3.2
Working Time
00000h-00m
Current time
00000h-00m
RDM UID 0x010e
Serial Num
Product ID

Operation

Input Select-In this menu,there are DMX Mode, Slave mode and APP control Mode for you to choose.
1.DMX Mode-In this menu,you can connect several pieces of lights with DMX cable and control them with control console.
1) “Channel [xx]” will be showed, “X” represents the showed DMX channel mode. You can press the UP or DOWN button to select your desired Channel mode.
2) “xxx” will be showed, “x” represents the showed address. You can press the UP or DOWN button to select your desired address.
3) DMX STATE-In this menu,you can choose the DMX signal you desired. Press “ENTER” and you can choose “BLACKOUT” or “DMX HOLD”;”BLACKOUT” means cut off the DMX signal and “DMX HOLD” means connect DMX signal.
2.SLAVE MODE-In this menu, you can choose one light as the MASTER light and other lights in SLAVE Mode will run follow the MASTER light.
1) Press “ENTER” and then press “UP” or “DOWN” to “SLAVE Mode”.
2) Press “ENTER” and “SLAVE” will be showed, then press “ENTER” to choose.
3.Vision APP-In this menu, you can use APP control function via a Bluetooth connection to your phone.
1) Press “ENTER” button and then UP or DOWN button until “Vision APP ” is showed.
2) Press “ENTER” button, and “unlink” will be showed.Then will showed confirm after click enter and click enter again.
3) Press “up or down” button, and the APP connection status and signal status will be displayed.

Manual mode-In this menu, you can adjust the value of color ,CTO and strobe speed as you like.
1. Press “ENTER” button and then UP or DOWN button until “Manual mode” is showed.
2. Press “ENTER” button, and there are eight options. Then press ENTER to select the option and press UP or DOWN button to select the value you desire as below:
1) RED - You can adjust the red brightness in this menu.
2) GREEN - You can adjust the green brightness in this menu.
3) BLUE - You can adjust the blue brightness in this menu.
4) WHITE - You can adjust the white brightness in this menu.
5) COLOR -You can select 50 static color in this menu.
6) CTO - You can adjust the CTO in this menu.
7) STROBE - You can adjust the strobe speed in this menu.
8) Dimmer - You can adjust the brightness of color in this menu.

Auto Mode-In this menu, you can select your desire Auto mode and adjust the running speed.
1. Press “ENTER” button and then UP or DOWN button until “Auto mode” is showed.
2. Press “ENTER” button, and “SPEED” or “AUTO” will be showed. Then press ENTER,and you can see two items as below:
1) SPEED - You can select your desired speed in this menu.
2) AUTO - You can select your desired auto mode in this menu.

CUSTOMER-In this menu,you can select the AUTO program edited in the “EDIT” menu.
1. Press “ENTER” button and then UP or DOWN button until “CUSTOMER” is showed.
2. Press “ENTER” button, and there are 11 pre-programmed mode edited in the “EDIT”menu.
EDIT Mode-In this menu, you can edit your desired AUTO program.
1. Press “ENTER” button and then UP or DOWN button until “EDIT” is showed.
2. Press “ENTER” button, and open the “EDIT” mode to edit the custom programs from“PR.01” to “PR.11”.And there are 32 scenes that can be edited in each custom program.
3. You can edit a scene by adjusting the value of “RED (0~255)”, “GREEN (0~255)”, “BLUE (0~255)”, “WHITE (0~255)”, “FADE (0~30)”, “FLASH(0~30)”, “STROBE (0~30)” & “TIME (0~255)” as you like.
Then the data will be saved, when you press the ENTER button for 5 seconds.

UPLOAD-In this menu,you can connect several pieces of lights with signal cables and set one light as the MASTER and others in SLAVE mode.Then upload the custom program in the MASTER light to the lights in SLAVE mode.
1. Press “ENTER” button and then UP or DOWN button until “UPLOAD” is showed.
2. Press “ENTER” button to upload the custom programs from the MASTER light to the SLAVE ones.

Wireless-In this menu,you can receiver and release wireless signals.
1.Press“ENTER”button and then UP or DOWN button until “Wireless” is showed.
2.Press“ENTER””button,and "Receiver" or "Release" will be showed. Then press ENTER,and you can see two items as below:
1)Receiver- In this item,you can select "ON"or "OFF".If you select ON,you can use the wireless reception function.And if you select OFF,wireless reception will be turned off.
2)Release-In this item, you can clear wireless signals."SUCCEESS" will be displayed when the wireless signal is successfully cleared.

SET UP-In this menu, you can adjust the value of the function.
1. Press “ENTER” button and then UP or DOWN button until “SET UP” is showed.
2. Press “ENTER” button, and there will be thirteen options. Then,press ENTER to select the option and press UP or DOWN button to select the value you desire as below.
1)Remote - In this item, you can select “ON” or “OFF”. If you select ON, the remote mode will be on. And if you select OFF , the remote mode will be off.
2)Key locks - You can select whether the password is on or off in this menu , and the password is [UP] + [DOWN]+ [UP] + [DOWN] + .If you select “on”,then you have to input the password before pressing the buttons.Otherwise,the light won’t respond to your order.
3)LCD Black- In this item,you can select “ON” or “30S”.If you select ON,the displayer will be on all the time.And if you select 30S,the displayer will extinguish about 30s later.
4) Max temp - You can set the your desired Max working temperature about the light in this menu. When the working temperature of the light exceeds the Max temperature, the color of letter “Temp xx” showed in the menu will change from white to yellow.Meanwhile, the light will adjust the working temperature automatically.
5) Dimmer ALL - You can adjust the brightness of color in this menu.
6) LED Power - You can choose the battery usage mode you want.
7) Rate - You can choose the refresh frequency you want.
8) Dimmer Curve - You can choose the dimmer curve you want.
9) ID number - You can select an ID Number in this menu.Then, you can adjust the value of channel 11 to the corresponding scope and control the light individually with control console.
10)White Balance - You can adjust the brightness of each color.
11)Power State - You can adjust the power state in this menu.
12) AC Failure-In this menu,you can test the power supply system for proper operation.
1.Press "ENTER" button and then UP or DOWN button until "AC Failure"is showed.
2.Press "ENTER" button,and "ON" or "OFF" will be showed.If you select"on",emergency light function can be activated after power failure.
13) Factory Reset-In this menu,you can reset all the value of the system.

INFORMATION-In this menu, you can learn about the information of software, hardware,RDM UID, current time,serial number, product ID and the working time of the light.
1. Press “ENTER” button and then UP or DOWN button until “INFORMATION” is showed.
2. Press "ENTER" button, and "Software","Hardware", "RDM UID","current time",”serial number”,"product ID" and the "working time" of the light will be showed. Then press ENTER, and you can see seven items as below:
1) Software - This item displays the Software information.
2) Hardware - This item displays the Hardware information.
3) RDM UID - This item displays the RDM information about the light.
4) Current time - This item displays the current time about the light.
5) Working time - This item displays the working hours about the light.
6) Product ID - This item displays the Product ID about the light.
7) Serial number- This item displays the Serial number about the light.

DMX control mode

DMX 2 channel

channel	value	function
1	0 - 23	No function
	24 - 27	Red
	28 - 31	Green
	32 - 35	Blue
	36 - 39	Orange
	40 - 43	Cyan
	44 - 47	Magenta
	48 - 51	White
	52 - 55	Yellow
	56 - 59	Pink
	60 - 63	Violet
	64 - 67	Aquamarine
	68 - 71	Pale blue
	72 - 75	Full white
	76 - 79	Cool white
	80 - 83	Day light
	84 - 87	Warm white
	88 - 91	Tungsten
	92 - 95	Medium amber
	96 - 99	Straw
	100 - 103	Spring yellow
	104 - 107	Light rose
	108 - 111	Dark pink
	112 - 115	Magenta 2
	116 - 119	Med blue green
	120 - 123	Med blue green 2
	124 - 127	Blue 2
	128 - 131	Bright pink
	132 - 135	Medium blue
	136 - 139	Violet

channel	value	function
	140 - 143	Medium yellow
	144 - 147	Apricot
	148 - 151	Pale yellow
	152 - 155	Pale Lavender
	156 - 159	Pale yellow 2
	160 - 163	Evening blue
	164 - 167	Surprise pink
	168 - 171	Scarlet
	172 - 175	Surprise peach
	176 - 179	Light peach
	180 - 183	Warm white 2
	184 - 187	Mauve
	188 - 191	Bright blue
	192 - 195	Alice blue
	196 - 199	Rose indigo
	200 - 203	Urban blue
	204 - 207	Cool blue
	208 - 211	Light salmon
	212 - 215	Mayan sun
	216 - 219	Cherry rose
	220 - 222	Flesh pink
	223 - 255	Full white
2	0	No functions
	1 - 23	2500 K
	24 - 47	3000 K
	48 - 71	3500 K
	72 - 95	4000 K
	96 - 119	4500 K
	120 - 143	5000 K
	144 - 167	6000 K
	168 - 191	7000 K
	192 - 215	8000 K
	216 - 239	9000 K
	240 - 255	10000 K

DMX 3 channel

channel	value	function
1	0 - 255	Hue
2	0 - 255	Saturation
3	0 - 255	Value(brightness)

DMX 5 channel

channel	value	function
1	0 - 255	Master dimmer from 0 to 100%
2	0 - 255	Red dimmer
3	0 - 255	Green dimmer
4	0 - 255	Blue dimmer
5	0 - 255	White dimmer

DMX 8 channel

channel	value	function
1	0 - 255	Master dimmer from 0 to 100%
2	0 - 9	No functions (LED ON)
	10 - 189	Strobe from slow to fast
	190 - 199	No functions (LED ON)
	200 - 249	Random strobe from slow to fast
	250 - 255	No function (LED ON)
3	0 - 255	Red dimmer
4	0 - 255	Green dimmer
5	0 - 255	Blue dimmer
6	0 - 255	White dimmer
7	0 - 7	No function
	8 - 23	AUTO 1
	24 - 39	AUTO 2
	40 - 55	AUTO 3
	56 - 71	AUTO 4
	72 - 87	AUTO 5
	88 - 103	AUTO 6
	104 - 119	AUTO 7
	120 - 135	AUTO 8
	136 - 151	AUTO 9
	152 - 167	AUTO 10
	168 - 183	custom1
	184 - 199	custom2
	200 - 215	custom3
	216 - 255	custom4
8	0 - 255	Auto modes speed from slow to fast

DMX 11 channel

channel	value	function
1	0 - 255	Master Dimmer
2	0 - 9	No functions (LED ON)
	10 - 189	Strobe from slow to fast
	190 - 199	No functions (LED ON)
	200 - 249	Random strobe from slow to fast
	250 - 255	Strobe from slow to fast
3	0 - 255	Red dimmer
4	0 - 255	Green dimmer
5	0 - 255	Blue dimmer
6	0 - 255	White dimmer
7	0 - 23	No function
	24 - 27	Red
	28 - 31	Green
	32 - 35	Blue
	36 - 39	Orange
	40 - 43	Cyan
	44 - 47	Magenta
	48 - 51	White
	52 - 55	Yellow
	56 - 59	Pink
	60 - 63	Violet
	64 - 67	Aquamarine
	68 - 71	Pale blue
	72 - 75	Full white
	76 - 79	Cool white
	80 - 83	Day light
	84 - 87	Warm white
	88 - 91	Tungsten
	92 - 95	Medium amber
	96 - 99	Straw
	100 - 103	Spring yellow
	104 - 107	Light rose
	108 - 111	Dark pink
	112 - 115	Magenta 2
	116 - 119	Med blue green
	120 - 123	Med blue green 2
	124 - 127	Blue 2
	128 - 131	Bright pink
	132 - 135	Medium blue
	136 - 139	Violet
	140 - 143	Medium yellow
	144 - 147	Apricot
	148 - 151	Pale yellow
	152 - 155	Pale Lavender

channel	value	function
7	160 - 163	Just blue
	164 - 167	Surprise pink
	168 - 171	Scarlet
	172 - 175	Surprise peach
	176 - 179	Light peach
	180 - 183	Warm white 2
	184 - 187	Mauve
	188 - 191	Bright blue
	192 - 195	Alice blue
	196 - 199	Rose indigo
	200 - 203	Urban blue
	204 - 207	Cool blue
	208 - 211	Light salmon
	212 - 215	Mayan sun
	216 - 219	Cherry rose
	220 - 222	Flesh pink
	223 - 225	Skelton exotic sangria
8	0	No functions
	1 - 23	2500 K
	24 - 47	3000 K
	48 - 71	3500 K
	72 - 95	4000 K
	96 - 119	4500 K
	120 - 143	5000 K
	144 - 167	6000 K
	168 - 191	7000 K
	192 - 215	8000 K
	216 - 239	9000 K
	240 - 255	10000 K
9	0 - 7	No function
	8 - 23	AUTO 1
	24 - 39	AUTO 2
	40 - 55	AUTO 3
	56 - 71	AUTO 4
	72 - 87	AUTO 5
	88 - 103	AUTO 6
	104 - 119	AUTO 7
	120 - 135	AUTO 8
	136 - 151	AUTO 9
	152 - 167	AUTO 10
	168 - 183	custom1
	184 - 199	custom2
	200 - 215	custom3
	216 - 255	custom4
10	0 - 255	Auto modes speed from slow to fast

channel	value	function
11	0 - 255	ID address (see details in the following table)

Channel 11 (Id address set)

0--9	all Ids
10--19	Id1
20--29	Id2
30--39	Id3
40--49	Id4
50--59	Id5
60--69	Id6
70--79	Id7
80--89	Id8
90--99	Id9
100--109	Id10
110--119	Id11
120--129	Id12
130--139	Id13
140--149	Id14
150--159	Id15
160--169	Id16

170--179	Id17
180--189	Id18
190--199	Id19
200--209	Id20
210	Id21
211	Id22
212	Id23
213	Id24
214	Id25
215	Id26
216	Id27
217	Id28
218	Id29
219	Id30
220	Id31
221	Id32
222	Id33

223	Id34
224	Id35
225	Id36
226	Id37
227	Id38
228	Id39
229	Id40
230	Id41
231	Id42
232	Id43
233	Id44
234	Id45
235	Id46
236	Id47
237	Id48
238	Id49
239	Id50

240	Id51
241	Id52
242	Id53
243	Id54
244	Id55
245	Id56
246	Id57
247	Id58
248	Id59
249	Id60
250	Id61
251	Id62
252	Id63
253	Id64
254	Id65
255	Id66

CABLE CONNECTORS

Cabling must have a male XLR connector on one's end and a female XLR connector on the other's end.

DMX connector configuration

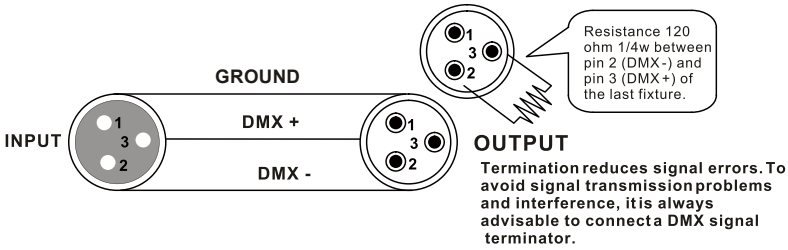

Caution:Do not allow contact between the ground and the fixture's chassis ground. Grounding the ground can cause a ground loop, and your fixture may perform erratically. Test cables with an ohm meter to verify positive pole and to make sure the pins are not grounded or shorted to the shield or each other.

3-PIN TO 5-PIN CONVERSION CHART

Please note if you use a controller with a 5 pin DMX output connector, you need to use a 5 pin to 3 pin adapter. The chart below details a proper cable conversion:

3-PIN TO 5-PIN CONVERSION CHART

Conductor	3 Pin Female (output)	5 Pin Male (Input)
Ground/Shield	Pin 1	Pin 1
Data (-) signal	Pin 2	Pin 2
Data (+) signal	Pin 3	Pin 3
Do not use		Do not use
Do not use		Do not use

Connection

DMX connection

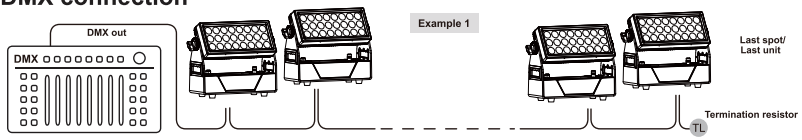

Master / Slave connection

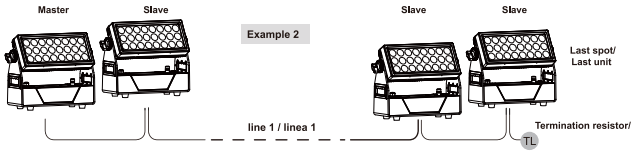

Wireless connection

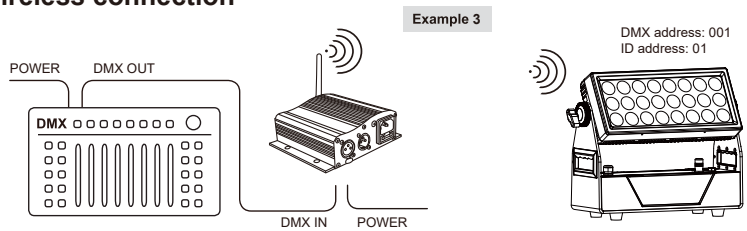

Connection

Press “ENTER” and then press “UP” or “DOWN” to “SET UP” .

Press “ENTER” and then press “UP” or “DOWN” to “Wireless rel” is displayed, press “ENTER”.Then press “DMX Mode” is ok.

Then, until Green wireless signal is showed. Then Wireless DMX connected success.

About the condition of wireless signal, green means the setting is successful,red means the signal is unsuccessful.

Release wireless DMX signal

Press “ENTER” and then press “UP” or “DOWN” to “Wireless rel”.

Press “ENTER” and then press “UP” or “DOWN” to “Release +/-”,and then long press “UP” or “DOWN” about 5-6 seconds. Until “clear is success” is showed. It means release signal successfully.

RDM---Remote Device Management

RDM is a wild version of the DMX512-A protocol, allowing dimming stations and other control devices to be discovered through a DMX512 network, and then configuring, status monitoring, and managing intermediate and line end devices.

It allows two-way communication between the lighting device or system controller and the connected RDM compatible device through the standard DMX. This protocol will allow these devices to be configured, monitored, and managed in a manner that does not interfere with the normal operation of standard DMX512 devices that do not recognize the RDM protocol.
Allow a controller or test device to find other devices that can be RDM, such as computer lights or dimming cabinets, and remotely manage them through this connection intelligence. Including the ability to remotely set the initial address of the DMX512, query the device's errors or statistics, and achieve most of the configuration settings that are usually done on the front panel of the device. RDM can run with the new RDM device or any original DMX512 product on the same data link without any performance impact. Since RDM runs on the first team DMX512 link, the only infrastructure upgrade required by RDM is to upgrade the existing data distributor to implement a two-way mode to support RDM.

The RDM information is transmitted through the first pair of DMX512 data channels. RDM uses packets that include non-zero initial codes to start and control communications. This alternating(rotating) session and waiting for indicative responses is performed in a semi-duplex format. The second data pair is not used for any RDM function.

Two-way data transmission-each vendor's equipment can exchange data, Art-net can only transmit data, can not exchange with each other.

Its functions are as followed:

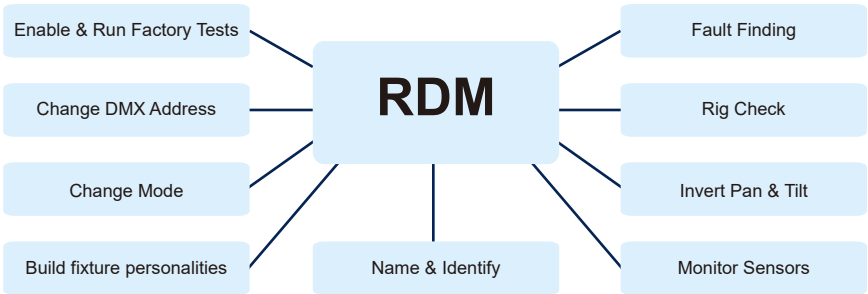

IR Controller

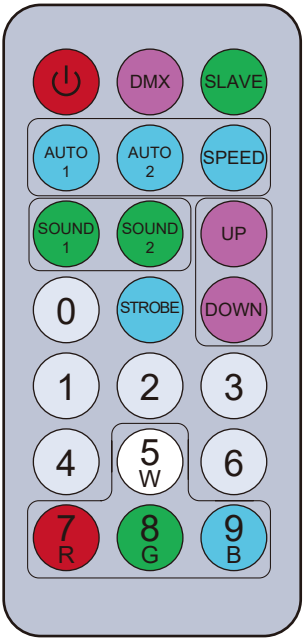

Power on/off button

DMX button,to control DMX address when press this button.It is channel mode when double click.

Master-slave mode button.

Automatic mode button

Speed adjustive button

Sound mode button

Up and down button,you can choose the program that you need or numerical.

Strobe button

0 1 2 3 4 5 W 6 7 R 8 G

You can use these number button to adjust numerical in any program mode.

7 R 8 G 9 B 5 W Color choosing button.