BATWALL1520LIP

15×20W LED Battery Powered WDMX IP65 Light

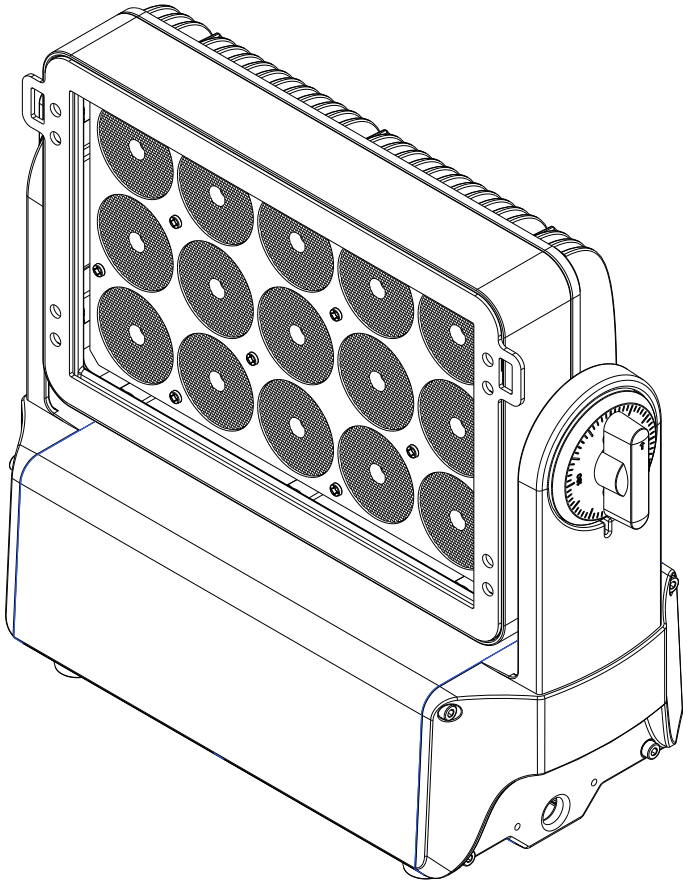

USER MANUAL

TECHNICAL SPECIFICATION

- 15 x 20W RGB + Lime Led
- Optic 10°
- Beam angle / 10°
- Wireless DMX
- IR Remote control
- Auto / Static / WDMX/IRC
- DMX : 5/9/10ch / Master-Slave /Audio
- Dimensions : 307 x 288 x 147mm
- Weight : 8.2Kg
- IP65
- Wireless Solution Compatible
- Operating time : up to 20H with one color

INCLUDED ACCESSORIES :

Power cables + XRL cables + Remote Control

DIMENSIONS :

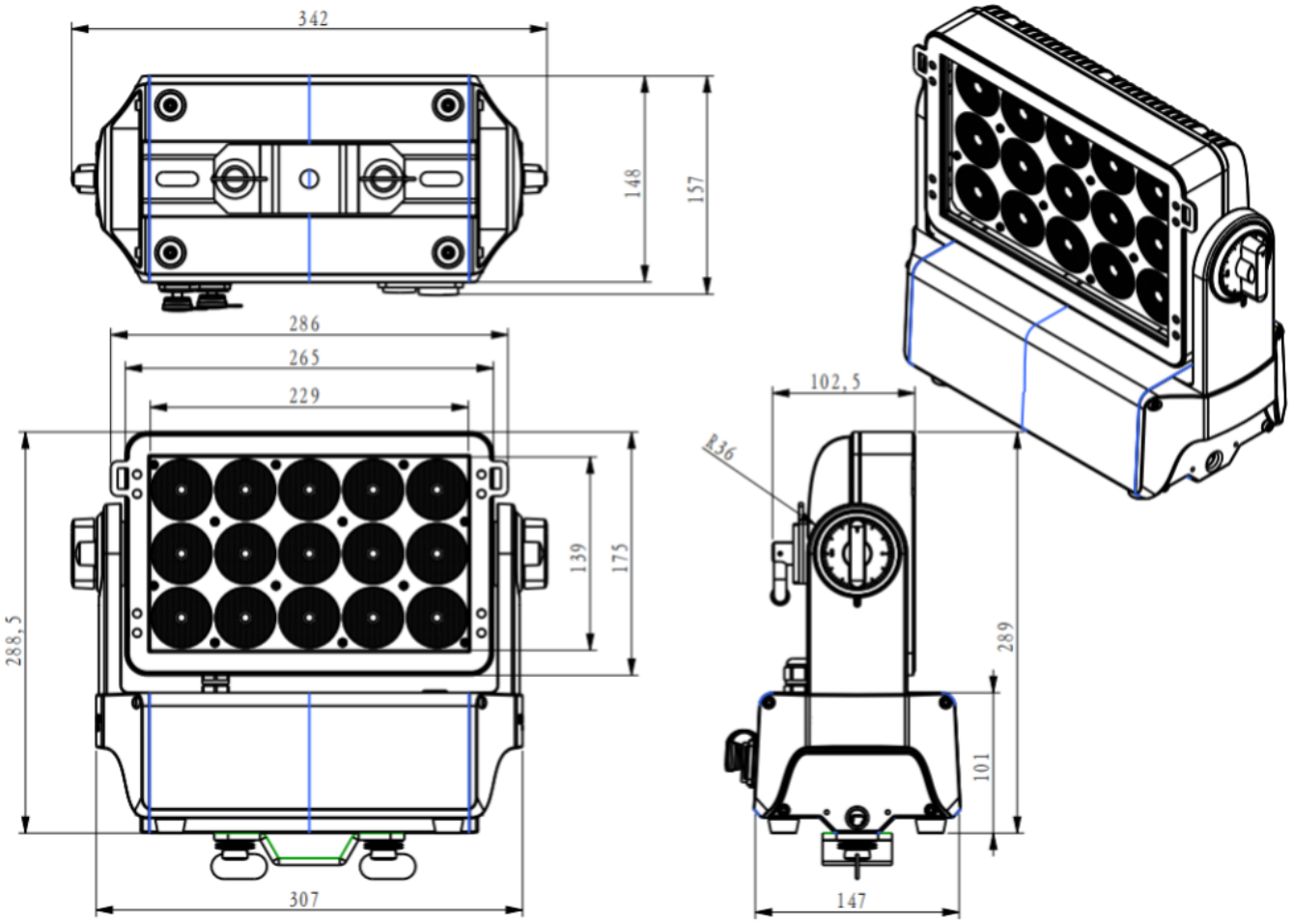

WARNING!

- **This is a product which has been developed for professional usage in event technology. It is not suitable as a houshold lighting.**
- **Don ‘ t use magnifiers or any other optical instrument to look at the be**
- **The effects of this device, expecially the stroboscope effect, can cause problems for sensitive people or may even cause epileptical seizures.**
- **NEVER stare, not even temporarily, directly into the light source.**

Please read, understand and follow the instructions

SAFETY

General Instruction

1 Do not expose this equipment to flammable materials

2 Keep the battery poles away from conductive objects, such as keys, jewelry, or other materials. Otherwise, the battery may be short-circuited, resulting in injury and burns.

3 Do not dispose of batteries in fire as they may explode. Damaged batteries may also explode. Connection must be made to a power supply system fitted with efficient earthing (Class I appliance ac-cording to standard EN 60598-1). It is, moreover, recommended to protect the supply lines of the units from indirect contact and/or shorting to earth by using appropriately sized residual current devices.

4 The connection to the main network of electric distribution must be carried out by a qualified elec-trical installer. Check that the main frequency and voltage correspond to those for which the unit is designed as given on the electrical data label.

5 Never use the fixture under the following conditions:

- in places subject to vibrations or bumps;
- in places with an ambient temperature of over 45° C.

6 Make certain that no inflammable liquids, water or metal objects enter the fixture.

7 Do not dismantle or modify the fixture.

8 All work must always be carried out by qualified technical personnel. Contact the nearest sales point for an inspection or contact the manufacturer directly.

9 If the unit is to be put out of operation definitively, take it to a local recycling plant for a disposal which is not harmful to the environment.

Warnings and installation precautions

- In order to prevent the risk of an electric shock, under no circumstances remove the cover/back or open the unit in any way! No user serviceable parts are inside. Service, maintenance and
- repairs should only be done by qualified service personnel or the manufacturer.
- CAUTION! Intense LED light source! Risk of eye damage. Do not look into the light source
-
- The fixture has an integrated, non-removable battery, do not attempt to remove the battery. Do
- not open
- the headlamp. To replace the battery, take the device to an authorized service center.
- Never remove warning or informative labels from the unit.
- Never use anything to cover the ground contact.
- Never lift the device holding it by the projector-head, as the mechanics may be damaged
- Do not shake the device. Avoid brute force when installing or operating the device.
- Only operate the device after having checked if the housing is firmly closed and all screws are tight-ly fastened.

  Only operate the device after having familiarized with its functions.

  Avoid flames and do not put close to flammable liquids or gases.

  Always allow a free air space of at least 0.8 m around the unit for ventilation.

  Always disconnect power from the mains, when device is not used or before cleaning! Only handle the power cord holding it by the plug. Never pull out the plug by tugging the power cord.

MENU STRUCTURE

The RED values are the default values

DMX Address	xxx		
Operate Mode	Control Mode	W-DMX	
		IRC	
	Auto Mode	OFF	
		Auto01	
		Auto02	
		Auto03	
		Auto04	
		Auto05	
		Auto06	
		Auto07	
	Auto SP	000 > 100 - (50)	
	Master/Slave	Master	
		Slave	
	Sound	000 > 100% - (60)	
	Static control	Dimmer	000-255
		Strobe	000-255
		Effect Macro	000-255
		Speed	000-255
		Color macros	
		Red	000-255
		Green	000-255
		Blue	000-255
		Lime	000-255
	Dimmer Speed	Dim0 (0s)	
		Dim1 (0,25s)	
		Dim2 (050s)	
		Dim3 (075s)	
		Dim4 (1s)	
Channels	5CH/9CH/10CH		
Setting	Hold	On	
	Blackout	Off	
	Display reverse	On/Off	
	Battery:	Eco./Med./Full	
	Dimmer Curve	Linear	
		Exp	
		Log	
		S_Curv	
	PWM Rate	600Hz	
		1200Hz	
		2400Hz	
		4800Hz	
		9600Hz	
		15K Hz	
	Black light	ON/OF	
	Screen time	10-60S	
	Current ADJ Code : 0006	Red	XXX
		Green	XXX
		Blue	XXX
		Lime	XXX
	Temp:	60°C	
	W-DMX Setting	Link/Reset	
	Factory Reset	ON/OFF	
White balance	***Reserved for service***		
	Red	050-255	
	Green	050-255	
	Blue	050-255	
	Lime	050-255	
		050-255	

System info	SoftwareV:	1.00	
	DMX Level	Red	XXX
		Green	XXX
		Blue	XXX
		Lime	XXX
	Temp	XX°C	
	Operate Time	XXXH	
	RDM	00A6hXXXXX	

AFFICHEUR

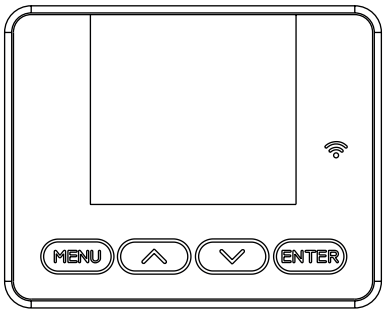

Menu : To exit active submenu.
Enter : To enter the menu or confirm the active function or value.
^ : To scroll up in the menu or increase the value of the active function.
V : To scroll down in the menu or decrease the value of the active function.

DMX ADDRESS MENU

DMX ADDRESS :

- Modify the DMX address using the **[^]** et **[V]** keys then validate using the **[ENTER]** key.

OPERATE MODE MENU

CONTROL MODE :

- Choose the control mode between W-DMX (wireless DMX) and IRC (Infrared remote control).
  using the **[^]** et **[V]** keys then validate using the **[ENTER]** key.
  To select W-DMX mode, ensure that AUTO mode is OFF and MASTER/SLAVE mode is set to SLAVE

AUTO MODE :

- Choose one of the automatic mode options:
  - **[OFF]** : by default.
  - **[AUTO01] à [AUTO07]** : Automatic modes

  Using the **[^]** et **[V]** keys then validate using the **[ENTER]** key.

AUTO SP :

- Choose the running speed of automatic programs from 0 to 100 using the **[^]** et **[V]** keys then validate using the **[ENTER]** key.

SOUND :

Choose the audio mode and adjust the audio sensitivity from 0 to 100 using the **[^]** et **[V]** keys then validate using the **[ENTER]** key.

MASTER / SLAVE :

- **[MASTER]** In this mode, The projector defines the W-DMX module as a transmitter and transmits the RGB Lime parameters to all the projectors connected to it. Refer to the section **[W-DMX Setting]** to pair the projectors **[MASTER]** to the **[SLAVE]** projectors
  NOTE : In **[MASTER]** mode the DMX value reception function is disabled. To use unit via wireless Dmx switch projector to **[SLAVE]** mode.
  Do not forget to validate any changes using the **[^]** et **[V]** keys and the **[ENTER]** key.
- **[SLAVE]** In this mode, The projector defines the W-DMX module as a receiver and receives all DMX information wirel essly.

STATIC CONTROL :

Define to use the projector in STATIC mode. You can adjust the different parameters such as Dimmer, Strobe, Red, Green , Blue and Lime and thus create a light state or activate automatic programs or color macros (described in the different DMX modes)

- Choose the different values from 0 to 255 using the **[^]** et **[V]** keys then validate using the **[ENTER]** key.

DIMMER SPEED :

In order to smooth the dimmer it is possible to implement a **DIMMER SPEED** to te Projector

- Choose one of the dimmer speed values using the **[^]** et **[V]** keys then validate using the **[ENTER]** key.
  - **[DIM0]** : 0 seconds.
  - **[DIM1]** : 0.25 seconds.
  - **[DIM2]** : 0.50 seconds.
  - **[DIM3]** : 0.75 seconds.
  - **[DIM4]** : 1 seconds.

CHANNELS MENU

CHANNELS :

- Choose the DMX mode from5 CH,**10 CH**. using the **[^]** et **[V]** keys then validate using the **[ENTER]** key.

SETTINGS MENU

HOLD :

Choose one of these two options to set the s behavior when losing the W-DMX signal using the **[^]** et **[V]** keys then validate using the **[ENTER]** key.

- **[ON] :** keeps the last value in case of loss of the W-DMX signal
- **[OFF] :** goes into blackout mode when losing the W-DMX signal

RDM :

- ***Not implemented***

DISPLAY REVERSE

Choose one of these two options to reverse the direction of the display using the **[^]** et **[V]** keys then validate using the **[ENTER]** key.

- **[ON] :** Inverted.
- **[OFF] :** Normal.

BATTERY

Enter this submenu to define the battery management mode using the **[^]** et **[V]** keys then validate using the **[ENTER]** key.

- Choose **[E**co.**]**
- Choose **[Med.]**
- Choose **[Full]**

DIMMER CURVE

Enter this submenu to define the Dimmer curve using the **[^]** et **[V]** keys then validate using the **[ENTER]** key.

- **[Linear]** - The increase in light intensity is linear as the DMX value increases.
- **[Exp]** - Light intensity control is finer at low levels and coarser at high levels
- **[Log]** - Light intensity control is coarser at low levels and finer at high levels.
- **[S-Curve]** - Light intensity control is finer at low and high levels and coarser at medium levels.

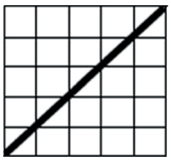
Linear Curve

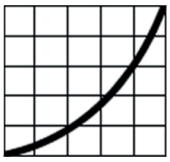
Exp Curve

Log Curve

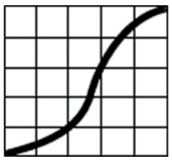
S Curve

BACKLIGHT :

- ***Not implemented***

SCREEN TIME

Enter this submenu to define the duration before the display turns off (between 10 seconds and 60 seconds),à l'aide des touches **[^]** et **[V]** puis valider à l'aide de la touche **[ENTER]**.

CURRENT ADJ

- **Reserved for service.**

TEMP

Reserved for service.

- **W-DMX SETTINGS**

Enter this submenu to configure Wireless DMX signal reception, using the **[^]** et **[V]** keys then validate using the **[ENTER]** key.

- **[LINK]** Enter this submenu to pair the projector with the Wireless DMX transmitter.
  Switch the transmitter to pairing mode then activate the **[LINK]** mode on the projector by validating
  using the **[ENTER]** key.

  [LINK] also allows pairing to a master projector. Follow the same procedure as pairing to a wireless DMX

  transmitter.
- **[RESET]** This submenu allows you to unpair the projector from a previous wireless connection. validate using the **[ENTER]** key.

  Note: It is mandatory to unpair the projector before pairing again.

WHITE BALANCE MENU

- **Reserved for service.**

SYSTEM INFO MENU

Enter this submenu to get the projector's system information:

- **[Software V]** To view the projector firmware version.
- **[DMX Level]** To display DMX values for Red, Green, Blue and Lime channels.
- **[Temp]** To display the projector temperature in Celsius.
- **[RDM]** Not applicable

DMX MAP

5 CHANNEL MODE

CH1	DIMMER	000-255
CH2	RED	000-255
CH3	GREEN	000-255
CH4	BLUE	000-255
CH5	LIME	000-255

9 CHANNEL MODE

CH1	DIMMER	000-255	DIMMER FROM 0% TO 100%
CH2	STROBE	000-005	NO STROBE
		006-063	STROBE FROM SLOW TO FAST
		064-191	STROBE LIGHTNING FROM SLOW TO FAST
		192-255	RANDOM STROBE FROM SLOW TO FAST
CH3	EFFECT MACROS	000-005	No EFFECT
		006-041	AUTO 01
		042-077	AUTO 02
		078-112	AUTO 03
		114-147	AUTO 04
		148-182	AUTO 05
		183-217	AUTO 06
		218-255	AUDIO 01
CH4	EFFECT MACROS SPEED	000-255	FROM SLOW TO FAST
CH5	COLOR MACRO	000-007	EMPTY
		008-015	Macro color 1
		016-023	Macro color 2
		024-031	Macro color 3
		032-039	Macro color 4
		040-047	Macro color 5
		048-055	Macro color 6
		056-063	Macro color 7
		064-071	Macro color 8
		072-079	Macro color 9
		080-087	Macro color 10
		088-095	Macro color 11
		096-103	Macro color 12
		104-111	Macro color 13
		112–119	Macro color 14
		120-127	Macro color 15
		128-135	White 2700K
		136-143	White 3200K
		144-151	White 3600K
		152-159	White 4000K

CH5	COLOR MACRO (CONTINUE)	160-167	White 4500K
		168-175	White 5000K
		176-183	White 5600K
		184-191	White 6000K
		192-197	White 6500K
		198-205	White 7000K
		206-213	White 7500K
		214-221	White 8000K
		222-229	White 8500K
		230-243	White 9000K
		244-255	White 10000K
CH6	RED	000-255	INTENSITY FROM 0% TO 100%
CH7	GREEN	000-255	INTENSITY FROM 0% TO 100%
CH8	BLUE	000-255	INTENSITY FROM 0% TO 100%
CH9	LIME	000-255	INTENSITY FROM 0% TO 100%

MODE 10 CHANNEL MODE

CH1	DIMMER	000-65535	DIMMER FROM 0% TO 100%
CH2	DIMMER FINE		
CH3	STROBE	000-003	NO STROBE
		004-063	STROBE FROM SLOW TO FAST
		064-150	STROBE LIGHTNING FROM SLOW TO FAST
		151-255	RANDOM STROBE FROM SLOW TO FAST
CH4	AUTO PROGRAMS	000	IDLE
		001-032	AUTO 01
		033-064	AUTO 02
		065-95	AUTO 03
		096-128	AUTO 04
		129-160	AUTO 05
		161-192	AUTO 06
		193-224	AUDIO 01
		225-255	AUDIO 02
CH5	AUTO PROGRAMS SPEED	000-255	FROM SLOW TO FAST
CH6	COLOR MACRO	000-009	IDLE
		010-015	WHITE 10000 °K
		016-021	WHITE 9000 °K
		022-027	WHITE 8500 °K
		028-033	WHITE 8000 °K

CH5	COLOR MACRO (CONTINUE)	160-167	White 4500K
		168-175	White 5000K
		176-183	White 5600K
		184-191	White 6000K
		192-197	White 6500K
		198-205	White 7000K
		206-213	White 7500K
		214-221	White 8000K
		222-229	White 8500K
		230-243	White 9000K
		244-255	White 10000K
CH6	RED	000-255	INTENSITY FROM 0% TO 100%
CH7	GREEN	000-255	INTENSITY FROM 0% TO 100%
CH8	BLUE	000-255	INTENSITY FROM 0% TO 100%
CH9	LIME	000-255	INTENSITY FROM 0% TO 100%
		244-255	White 10000K
CH10	CONTROL	000-036	No effect
		037-074	BATTERY Full (WAIT 10S+CH2=100
		075-111	BATTERY MED. (WAIT 10S+CH2=100
		112-148	BATTERY ECO. (WAIT 10S+CH2=100
		149-184	UNLINK (WAIT 10S+CH2=100
		186-222	FACTORY RESET (WAIT 10S+CH2=100
		223-255	No function