# PANEL2200TW

Studio LED Panel

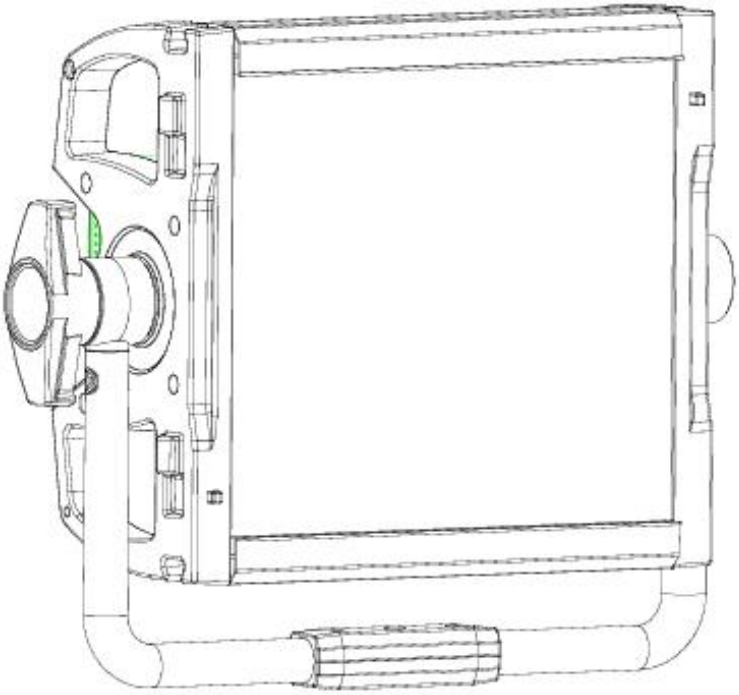

# USER MANUAL

- Be sure to read the USER MANUAL carefully before using this product.
- Be sure to keep the USER MANUAL properly for future needs.
- Use this product correctly when you can fully understand the User Manual

# TABLE OF CONTENTS

**1. Safety instruction ..... 3.4**

**2. Technical specifications ..... 5.6**

**3. How to set up lighting fixtures..... 6.7.8**

3.1 Control Panel.....6.7

3.2 Main Functions .....9

**4. DMX Channel ..... 10.11.12.13.14**

**5. Troubleshooting.....14.15**

**6. Fixture cleaning .....15**

## Safety Instruction

**WARNING**

**Please read the instructions carefully which includes important information about the installation, operation and maintenance.**

Keep this manual as a basis for future consultation, and if you sell this product to other users, make sure they are get this manual.

Pay attention to:

The equipment is well packaged when leaving the factory. Please follow the user manual. The machine failure caused by human reasons is not covered by the warranty.

- ☑Before using the product, please open and check carefully to ensure that the lamps have no damage caused by transportation.
- ☑Equipment is suitable for both indoor and outdoor use.
- ☑The installation and operation of the fixture shall be carried out by the professionals.
- ☑Don't let the children operate this fixture.
- ☑Use safe ropes to fix the equipment, and hold the bottom when moving it.
- ☑Equipment must be installed in a well-ventilated place,at least 50cm next to other plane items.
- ☑Ensure that the air vents are unobstructed to avoid overheating during lamp operation.
- ☑Before operation, ensure that the supply voltage matches the supply voltage required by the equipment.
- ☑Please ground the conductor in case of electric shock..
- ☑Do not operate lamps below 0℃ or above 40℃.
- ☑Do not connect the lamp directly to the dimming device.
- ☑Do not place combustible items next to the lamps when operation to prevent fire risk.
- ☑Before opening the fixture, please carefully check whether the power cord is damaged. If there is any damage, please replace it immediately.

☑Avoid flammable liquid, water or metal and other conductive bodies into the lamp, to avoid electric shock or fire. If any foreign matter enters the lamp, please cut off the power supply immediately.

☑Avoid operating the lamps in a dirty and dusty environment, and clean and maintain the lamps regularly.

☑Do not touch the wire when the lamp is running to prevent electric shock.

☑Avoid the winding of the power cord with other wires.

☑Disconnect the power supply before replacing the fuse. ☑Use the same model when replacing the fuse.

☑Do not open the lamp repeatedly.

☑lease replace the lamp shell, lens or ultraviolet filter in time.

☑No available parts inside the lamp, do not open the lamp shell without authorization.

☑If the machine fails, please stop using immediately and check without electric power; Do not repair by yourself; It need help, please contact the most recent authorized sales / technology center.

☑Please cut off the power supply when the lamp is not used for a long time or is repaired.

☑When transporting it again, please use the original packing material.

☑Do not look directly at the lamps during operation.

☑Do not operate the lamp without a protective cover or a shell damage.

Install：

The lamp should be fixed on the fast lock hook to ensure the installation firmly to prevent the trembling slide during operation. And make sure it's connecting structure of the lamp can support 10 times weight of the lamp. Install the lamp with the one able to support 12 times its weight safety rope.

The installation of the equipment should be carried out by professionals, but also installed in the place that people can not touch or easy to touch.

1. Technical specifications

Input power supply: AC 100~240V, 50/60Hz

Power: 200W

Light source: 144pcs CW LED + 144pcs WW LED

Color temperature: 2800~6500K±100K

Beam angle: 110°

**Optics:**

CRI: ≥97

CQS: ≥96

TLCI: ≥97

**Control:**

Channel mode: 1.P1: CCT 8Bit 7CH
2.P2: CCT 16Bit 10CH
3.P3: FX 8Bit 13CH

Control protocol: DMX512, RDM,

Software upgrade: Update software via USB

**Structure:**

Display screen: 1.77 LCD display screen

Signal input/output: 5 pin XLR socket

Power socket: power connector input

Protection level: IP20

**Main features:**

PANEL2200TW is used in various photography, television stations, conference rooms, large shopping malls, etc. It is widely used by its outstanding soft lighting characteristics . Powered by DC26V battery.

Size/Weight:

Dimensions: 449*382*192mm

Net weight: 6.8KG

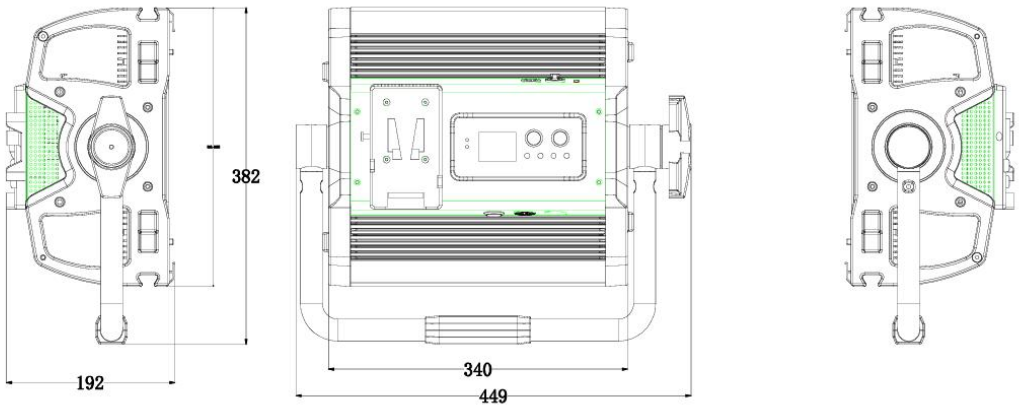


# 1. How to set up the unit

control panel

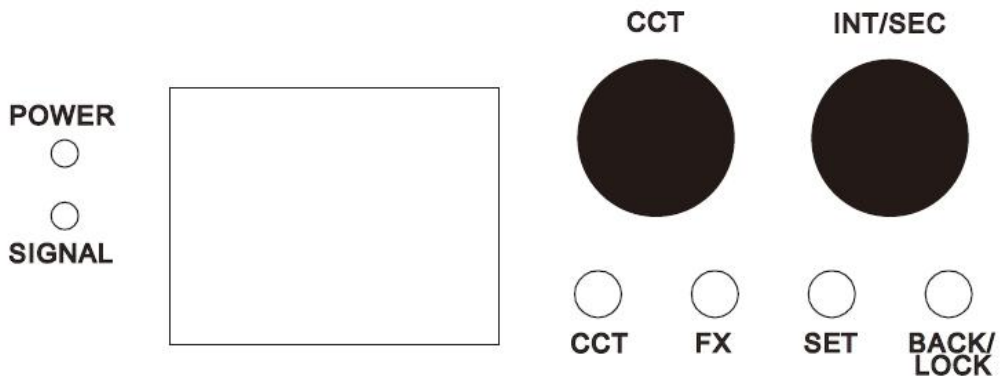


V-port battery input: DC26V battery

**Display:**

Display function menu and selected function

Key:

CCT button

The CCT button enters color temperature mode, and use the CCT knob INT/SEC knob to scroll through the color temperature and brightness settings.

FX button:

Press the EFFECT button to enter the main scene interface Use the INT/SEC knob to scroll and select the scene mode.

Set button:

Press the Setting button to enter the main settings interface. Use the INT/SEC knob to scroll and select settings options.

MENU/LOCK button:

Short press the MENU/LOCK button to return to the previous page, long press the MENU/LOCK button to unlock and lock.

(INT/SEC) Encoder:

Select Encoder: I/S Function:

• Dimming settings

• Menu selection settings.

Menu Open: Use the I/S scroll menu to open submenus and set parameters. Press the knob to open the submenu and confirm the settings.

CCT encoder:

• Color temperature setting

• Sub menu parameter selection settings.

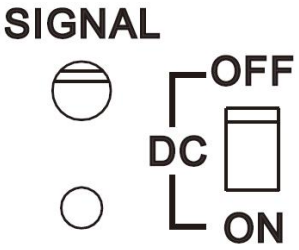


DC switch： The switch for battery .

# 4.Main Menu:

| | | |
|---|---|---|
| CCT | 0.0%-100.0% brightness | |
| | 2800-6500K CCT | |
| EFF | Candle | Fire |
| | Fireworks | Paparazzi |
| | Strobe | TV |
| | Explosion | Welding |
| | Lightning | Cloud |
| SETUP | DMX512 | address: 001-512 |
| | | Lost: Hold/Delay/OFF |
| | | DMX SW: ON/OFF |
| | | RDM SW : ON/OFF |
| | | Mode : P1: CCT 8Bit 7CH<br>P2: CCT 16Bit 10CH<br>P3: FX 8Bit 13CH |
| | | Terminal: ON/OFF |
| | FAN Setting | Off/Low /Auto/High/Full |
| | Language Setting | English/中文 |
| | Dim Curve | Linear/Exponent/S Curve /Log/TV Curve |
| | Display Setting | Brightness : 1-10 |
| | | LCD Time: 10-60sec/ Always |
| | | Rotation: 0 degree/180 degree |
| | | Buzzer : ON/OFF |
| | Update | USB update |
| | Restore | Yes/No |
| | About | FW Ver : V1.1.4 T |
| | | DMX Ver: V1.0.0 |
| | | RDM Ver: V1.0.0 |
| | | Serial : XXXXXX |

# 5. DMX Channel table:

| Mode 1：CCT，8bit | | | |
|---|---|---|---|
| DMX Channel | Value | Percent | Function |
| 1 | 0-255 | 0-100 | Brightness：<br>OFF->ON |
| 2 | 0-255 | 0-100 | CCT ：<br>2800K-6500K |
| 3 | | | NONE |
| 4<br>Notice：When the DMX signal is lost, the fan mode returns to the lighting menu settings. | 0–9<br>10–57<br>58–105<br>106–153<br>154-201<br>181–250<br>251–255 | 0–3<br>4–22<br>23–41<br>42–60<br>61-78<br>79–97<br>99–100 | Fan control：<br>Use the fan mode settings in the menu<br>Low speed mode<br>Auto Mode<br>High speed mode<br>NONE<br>Full speed<br>Fan Off |
| 5–7 | | | Reserved |

| Mode 2：CCT，16bit | | | | |
|---|---|---|---|---|
| DMX Channel | | Value | Percent | Function |
| HI | LO | | | |
| 1 | 2 | 0-65536 | 0-100 | Brightness：<br>OFF->ON |
| 3 | 4 | 0-65537 | 0-100 | CCT：<br>2800K-6500K |
| 5 | 6 | | | NONE |
| 7 | | 0–9<br>10–57<br>58–105<br>106–153<br>154-201<br>181–250<br>251–255 | 0–3<br>4–22<br>23–41<br>42–60<br>61-78<br>79–97<br>99–100 | Fan control：<br>Use the fan mode settings in the menu<br>Low speed mode<br>Auto Mode<br>High speed mode<br>NONE<br>Full speed<br>Fan Off |
| 8–10 | | | | Reserved |

| Mode 3：EFFECT，8bit | | | |
|---|---|---|---|
| DMX Channel | Value | Percent | Function |
| 1 | 0-255 | 0-100 | Brightness：<br>OFF->ON |

| | | | |
|---|---|---|---|
| 2 | | | Scene Selection |
| | 0 – 9 | 0 – 4 | NONE |
| | 10 – 19 | 5 – 7 | NONE |
| | 20 – 29 | 8 – 11 | Candle |
| | 30 – 39 | 12 – 15 | Cloud |
| | 40 – 49 | 16 – 19 | NONE |
| | 50 – 59 | 20 – 23 | NONE |
| | 60 – 69 | 24 – 27 | NONE |
| | 70 – 79 | 28 – 31 | Fire |
| | 80 – 89 | 32 – 35 | Fireworks |
| | 90 – 99 | 36 – 39 | Strobe |
| | 100 – 109 | 40 – 43 | Lightning |
| | 110 – 119 | 44 – 47 | Paparazzi |
| | 120 – 129 | 48 – 51 | NONE |
| | 130 – 139 | 52 – 55 | TV |
| | 140 – 149 | 56 – 58 | Explosion |
| | 150 – 159 | 59 – 62 | None |
| | 160 – 169 | 63 – 66 | None |
| | 170 – 179 | 67 – 70 | Welding |
| | 180 – 255 | 71 – 100 | Reserved |
| 3 | 0–255 | 0-100 | Scene parameters 1 as the table below |
| 4 | 0–255 | 0-100 | Scene parameters 2 as the table below |
| 5 | 0–255 | 0-100 | Scene parameters 3 as the table below |
| 6 | 0–255 | 0-100 | Scene parameters 4 as the table below |
| 7 | 0–255 | 0-100 | Scene parameters 5 as the table below |
| 8 | 0–255 | 0-100 | Scene parameters 6 as the table below |
| 9 | 0–255 | 0-100 | Scene parameters 7 as the table below |
| 10 Notice：When the DMX signal is lost, the fan mode returns to the lighting menu settings.。 | | | Fan Control： Use the fan mode settings in the menu |
| | 0 – 9 | 0 – 3 | Low Speed mode |
| | 10 – 57 | 4 – 22 | Auto Mode |
| | 58 – 105 | 23 – 41 | High speed mode |
| | 106 – 153 | 42 – 60 | NONE |
| | 154 – 201 | 61 – 78 | Full speed |
| | 202 – 249 | 79 – 97 | Fan Off |
| | 251 – 255 | 99 – 100 | |
| 11–13 | | | Reserved |

| Mode 3：EFFECT，8bit, Candle | | | |
|---|---|---|---|
| Scene parameters | Value | Percent | Function |
| 1 | 0–84<br>85–170<br>171–255 | 0–33<br>34–66<br>67–100 | CCT range is discontinuous, randomly generate the setting range<br>4000 → 4400 K<br>4400 → 4800 K<br>4800 → 5200 K |
| 2 | 0–255 | 0–100 | Speed<br>Change 0 → 120 times/minute |

| Mode 3：EFFECT，8bit,Cloud | | | |
|---|---|---|---|
| Scene parameters | Value | Percent | Function |
| 1 | 0–255 | 0–100 | Bias<br>Paranoid values 0-50<br>Generate a new bias every 5 DMX values |
| 2 | 0–127<br>128–255 | 0–50<br>51–100 | Speed<br>2x slow speed → default speed<br>Default speed → 2x faster |

| Mode 3：EFFECT，8bit,Fire | | | |
|---|---|---|---|
| Scene parameters | Value | Percent | Function |
| 1 | 0–84<br>85–170<br>171–255 | 0–33<br>34–66<br>67–100 | CCT range is discontinuous, randomly generate the setting range<br>4000 → 4400 K<br>4400 → 4800 K<br>4800 → 5200 K |
| 2 | 0–255 | 0–100 | Speed<br>Change 0 → 180 times/minute |

| Mode 3：EFFECT，8bit, Fireworks | | | |
|---|---|---|---|
| Scene parameters | Value | Percent | Function |
| 1 | 0–84<br>85–170<br>171–255 | 0–33<br>34–66<br>67–100 | CCT range is discontinuous, randomly generate the setting range<br>2800 → 4000 K<br>4000 → 5300 K<br>5300 → 6500 K |
| 2 | 0–255 | 0–100 | Speed<br>10s-0.5s Fireworks interval |

| Mode 3：EFFECT，8bit,Strobe | | | |
|---|---|---|---|
| Scene parameters | Value | Percent | Function |
| 1 | 0–255 | 0–100 | Speed<br>Strobe 1 → 25 times/second |
| 2 | 0–255 | 0–100 | CCT<br>CCT 2800K-6500K |

| Mode 3：EFFECT，8bit,Lightning | | | |
|---|---|---|---|
| Scene parameters | Value | Percent | Function |
| 1 | 0–254<br>255 | 0–99<br>100 | Frequency<br>2 → 14 lightning settings<br>Random |
| 2 | 0–254<br>255 | 0–99<br>100 | Speed<br>0 → 10 strobe/second<br>Random |
| 3 | 0–255 | 0–100 | CCT<br>CCT 2800K-6500K |

| Mode 3：EFFECT，8bit, Paparazzi | | | |
|---|---|---|---|
| Scene parameters | Value | Percent | Function |
| 1 | 0–255 | 0–100 | Frequency<br>Strobe6 → 120 times/minute |
| 2 | 0–127<br>128–254 | 0–50<br>51–100 | Type<br>Modern<br>Classics |
| 3 | 0–255 | 0–100 | CCT<br>CCT 2800K-6500K |

| Mode 3：EFFECT，8bit, TV | | | |
|---|---|---|---|
| Scene parameters | Value | Percent | Function |
| 1 | 0–84<br>85–170<br>171–255 | 0–33<br>34–66<br>67–100 | CCT range is discontinuous, randomly generate the setting range<br>4000 → 4400 K<br>4400 → 4800 K<br>4800 → 5200 K |
| 2 | 0–255 | 0–100 | Speed<br>change4 → 24 times/minute |

| Mode 3：EFFECT，8bit,Explosion | | | |
|---|---|---|---|
| Scene parameters | Value | Percent | Function |
| 1 | 0–255 | 0–100 | Reduction<br>Reduction 4→ 0.5times per second |
| 2 | 250–255 | 0–100 | Trigger<br>Manual (explosive intensity) |
| 3 | 0–255 | 0–100 | CCT<br>CCT 2800K-6500K |

| Mode 3：EFFECT，8bit,Welding | | | |
|---|---|---|---|
| Scene parameters | Value | Percent | Function |
| 1 | 0–255 | 0–100 | Speed<br>Slow → Fast |
| 2 | 0–255 | 0–100 | Minimum value<br>0% → 75% Minimum value |
| 3 | 0–255 | 0–100 | CCT<br>CCT 2800K-6500K |

## Troubleshooting

Following are a few common problems that may occur during operation.

Here are some suggestions for easy troubleshooting:

**A. The fixture does not work, no light output, fan no work**

1. Check the connection of power.
2. Measure the mains voltage on the main connector.
3. Check the power indicator

**B. Not responding to DMX controller**

1. DMX LED should be on. If not, check DMX connectors, cables to see if link properly.
2. If the DMX LED is on and no response to the channel, check the address settings and DMX polarity.
3. If you have intermittent DMX signal problems, check the pins on connectors or on PCB of the fixture or the previous one.
4. Try to use another DMX controller.
5. Check if the DMX cables run near or run alongside to high voltage cables that may cause damage or interference to DMX interface circuit.

**C. Some fixtures don't respond to the easy controller**

1. You may have a break in the DMX cabling.
2. Check the LED for the response of the master/ slave mode signal.

**5.Fixture cleaning:**

The cleaning of internal must be carried out periodically to optimize light output. Cleaning frequency depends on the environment in which the fixture operates: damp, smoky or particularly dirty surrounding can cause greater accumulation of dirt on the fixture's optics.

Clean with soft cloth using normal glass cleaning fluid.

Always dry the parts carefully.

Clean the external optics at least every 20 days. Clean the internal optics at least every 20 days.