# PANEL1650IPFC

Studio LED Soft Panel IP65

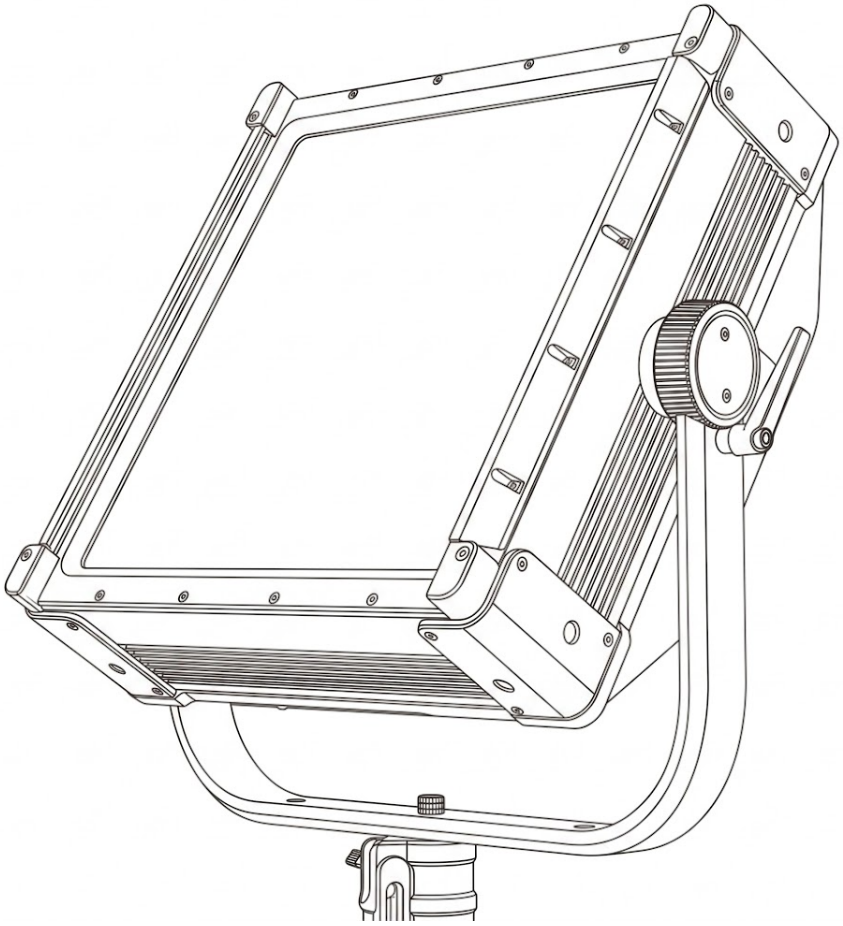

# USER MANUAL

- Be sure to read the USER MANUAL carefully before using this product.
- Be sure to keep the USER MANUAL properly for future needs.
- Use this product correctly when you can fully understand the User Manual

# INDEX

1. Before you work..... 2

2. specification..... 3
3. Accessories.....4

4. How to set up the unit.....4

   4.1 Rear panel.....4

   4.2 Main function.....5.6

5. DMX configuration.....7.8.9.10.11.12.13.14
6. ULTIMATE DMX.....14.15.16.17.18.19.20
7. Special effect parameter.....20.21.22.23
8. Troubleshooting.....23, 24

## 1, Before you work

WARNING

**Please read the instructions carefully which includes important information about the installation, operation and maintenance.**

**1.1** Packing instructions :

**1.2** When you get this product, please take it from carton carefully to make sure whether all the accessories are in and damaged or not. When you find that there are any parts or wrong sign with the carton, or non-operation, please inform us and to keep the carton and shipping bill completely.

**1.3** AC Power:

**1.4** Please check the manual before you operate the light. The rating current of the light listed which shows the average current-consume under the normal circumstances.

All the lights must be offered shoot-through circuit, it could not be connected dimmer circuit, although the dimmer channels are completely for 1-100% switch.

Before the light's working, please confirm the correct voltage.

**1.5** Safety instruction:

**1.6** Please confirm the same voltage to the light.

Please confirm there is no flammable material around the ligt.

The light must be set up the ventilating place. The distance is ≥51cm around approach material. To check the air passage is ok at any time.

The Maximum temperature is ≤40℃(104℉).

When the lights has problems, please stop to use to contact the supplier. Don't repair it by yourself! Don't connect by a dimmer.

To confirm the power wire is straight and non-damaged. Don't pull it directly.

Don't look at the bulb when the light is working to avoid any hurt.

## 2, specification

| | |
|---|---|
| Input voltage | AC100-240V, 50-60HZ |
| led source | RGBCW WW |
| Power consumption | 650W Maximum |
| CCT (correlated color temperature) | 2700-10000K +-100k |
| Colored Light | Full RGB+W Color Gamut with Hue and Saturation Control |
| Green-Magenta Adjustment | Continuously adjustable (Full Minus- to Full Plus green) |
| Color rendering | Average CRI>97 |
| | average TLCI >98 |
| beam angle | 110° |
| Control mode | DMX512, RDM, CRMX(optional) |
| light mode | CCT, HSI, GEL, RGBCW, XY |
| Dimming mode | 8 bit and 16bit |
| Dimming curve | 4 kinds |
| PWM | 24KHz |
| Power connector | Powercon in |
| DMX connector | 5pin in/out, RJ45 |
| 5VDC input | USB |
| N.W | 16.3kg |
| Mounting | 28 mm Spigot (Junior Pin) |
| Special effect: | Candle, cloud passing, club, color chase, cop car, fire, fireworks, strobe,lightning, paparazzi, pulsing, television |
| IP rate | IP65 |
| Dimension | 602.38*198.18*466mm |

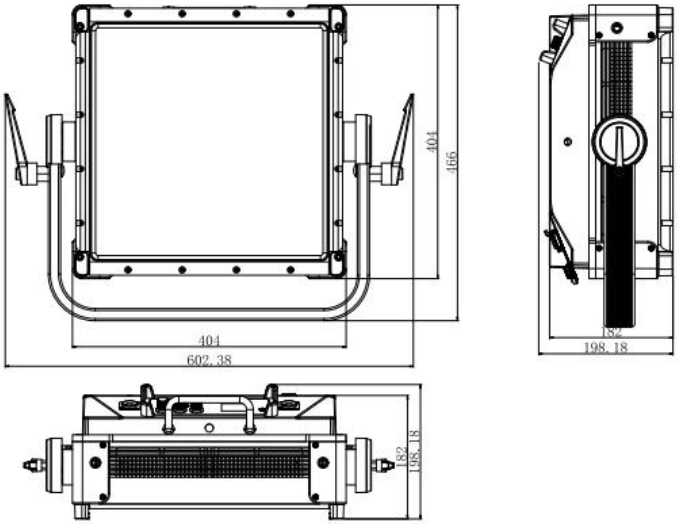


## 3, Accessories

Standard accessories：

1, POWERCON power cord x 1pcs

2, 5pin DMX cord x 1pcs

Barndoor (optional)
Soft box (optional)

## 4, How to set up the unit

### 4.1. Rear panel

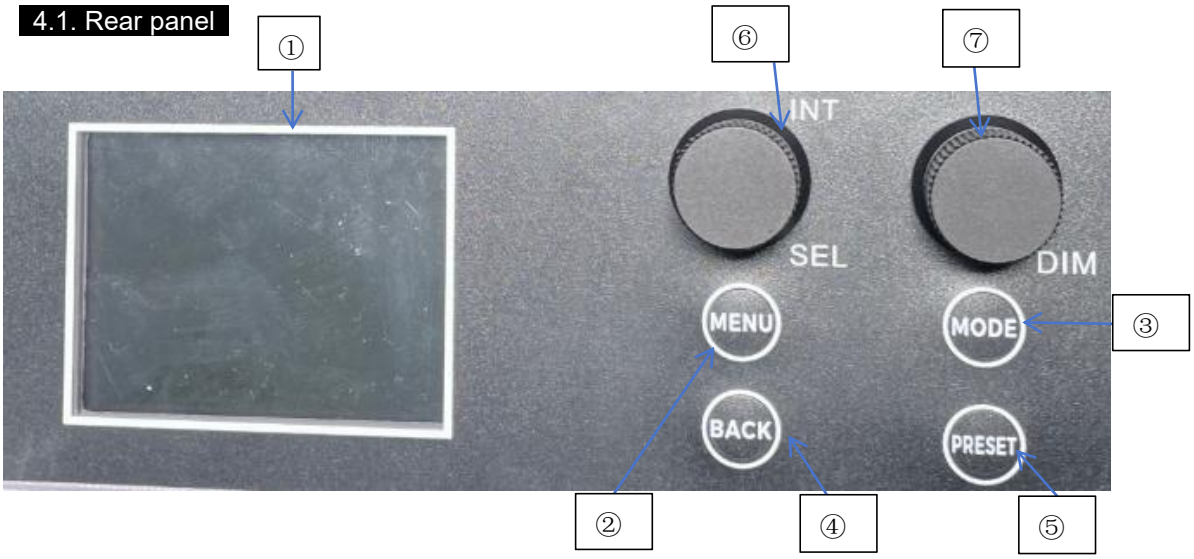


1.①LCD display.
2.②**MENU**,press to open the fixture menu, use the encoder ⑥ to scroll through the menu, open sub menus and set parameters.
3.③**MODE**, fast selection to the CCT, HSI, GEL, XY, RGBCW mode.
4.④BACK:cancel/return to last page. Comparing to the MENU button, BACK only can close

the sub menu, it can't close the main menu.

5.⑤**PRESET**, only the CIE (XY coordinate) function can be available for preset.

to call up a light present. A short press of the PRESET button brings up the list of all available presets.

To store a light preset. Use the fixture menu to adjust the setting, hold PRESET, until the preset save dialog open.

6、Encoder⑥ **INT/SEL**, the encoder has two functions,

（1）fixture menu closed. Setting the intensity.

（2）fixture menu open. Use the encoder knob to clockwise / counterclockwise to select function, open sub menus and set parameters. Press the knob to confirm settings.

7、⑦**DIMMER**： clockwise / counterclockwise to change brightness.

## 4.2. Main function

Turn the MENU knob enter to menu model, clockwise / counterclockwise to select function, press ENTER knob to confirm, same operation for the secondary menu. If you want to return to the last page, press BACK button.

| Main menu | Sub menu | tertiary menu | Description |
|---|---|---|---|
| CCT | Bri | 0%-100% | |
| | CCT range | 2700K-10000K | |
| | G/M | -1.100% green to +1.00% green | Green-Magenta point |
| HSI | HUE | 0-360° | |
| | Sat | 0-100% | |
| | Bri | 0-100% | |
| GEL | CCT | 3200K, 5600K | |
| | No. | 1-219 | Color number |
| | Bri | 0-100% | |
| CIE | Bri | 0-100% | |
| | X | 0.0000-0.8000 | X coordinate |
| | Y | 0.0000-0.8000 | Y coordinate |
| Light Effects | RGBCW | R, G, B, CW, WW | 0-255 |
| | Effects | candle | |
| | | Cloud passing | |
| | | Club | |
| | | Color chase | |
| | | Cop car | |
| | | Fire | |
| | | Fireworks | |
| | | Strobe | |
| | | Lightning | |
| | | Pararazzi | |
| | | Pulsing | |

| | | | |
|---|---|---|---|
| | | Television | |
| | Dimmer Curve | Linearity Curve | |
| | | Exponent Curve | |
| | | S Curve | |
| | | Logistic Curve | |
| DMX Addr | Addr: 1-255 | | |
| DMX Mode | Control mode | CCT&RGBCW 8bit | 11CH |
| | | CCT&RGBCW 16bit | 20CH |
| | | CCT&HSI 8bit | 8CH |
| | | CCT&HSI 16bit | 14CH |
| | | CCT 8bit | 5CH |
| | | CCT 16bit | 8CH |
| | | HSI 8bit | 5CH |
| | | HSI 16bit | 8CH |
| | | RGBCW 8bit | 8CH |
| | | RGBCW 16bit | 14CH |
| | | XY 8bit | 5CH |
| | | XY 16bit | 8CH |
| | | RGBCW 8bit | 12CH |
| | Remote mode | Open / close | |
| | Dimmer Curve | Linearity Curve | |
| | | Exponent Curve | |
| | | S Curve | |
| | | Logistic Curve | |
| | Control set | DMX512 | |
| | | LUMENRADIO | |
| System Parameter | Factory Reset | | |
| | Fan Set | Auto | |
| | | High Speed | |
| | | Low Speed | |
| | | Close | |
| | Version Info | Soft Ver: 1.0.1<br>Hard Ver:1.0.0 | |
| | System Set | Bri | On/Off |
| | | Lang | English/Chinese |
| | | Rotate | 0°, 180° |

## 5. DMX512 configuration

Lights can be controlled via DMX. Starting at a base channel.

Each DMX mode can operate in 8-bit or 16-bit resolution.

Note that some charts may extend onto multiple pages.

| 8 bit resolution | 16 bit resolution |
|---|---|

| 1 channel per function | 2 channels per function |
|---|---|

1. CCT & RGBCW 8bit (11CH)

| CH | value | % | function |
|---|---|---|---|
| 1 | 0-255 | 0-100 | Dimmer (0%-100%) |
| 2 | 0-255 | 0-100 | CCT (2700K-10000K) |
| 3 | <br>0-10<br>11-20<br>21-119<br>120-145<br>146-244<br>245-255 | <br>0-4<br>5-8<br>9-47<br>48-57<br>58-96<br>97-100 | Green-Magenta point<br>Neutral/No effect<br>-100 green<br>-99 - -1 green<br>No effect<br>+1 - +99 green<br>+100 green |
| 4 | 0-255 | 0-100 | Crossfade to Color<br>From white to RGBW |
| 5 | 0-255 | 0-100 | red |
| 6 | 0-255 | 0-100 | green |
| 7 | 0-255 | 0-100 | blue |
| 8 | 0-255 | 0-100 | Cool white |
| 9 | 0-255 | 0-100 | Warm white |
| 10 | <br>0-9<br><br>10-57<br>58-105<br>106-153<br>154-201<br>202-249<br>251-255 | <br>0-3<br><br>4-22<br>23-41<br>42-60<br>61-78<br>79-97<br>99-100 | Fan control<br>Use fan mode setting of fixture menu<br>Low speed<br>Low-medium speed<br>Medium speed<br>Medium-high speed<br>Fan at full speed<br>Fan off |
| 11 | <br>0-19<br>20-255 | <br>0-7<br>8-100 | Light strobe<br>No effect<br>1 flash/s - 25 flashes/s |

2. CCT & RGBCW 16bit (20CH)

| CH | value | % | function |
|---|---|---|---|
| 1-2 | 0-65535 | 0-100 | Dimmer (0%-100%) |
| 3-4 | 0-65535 | 0-100 | CCT(2700K-10000K) |

| | | | |
|---|---|---|---|
| 5-6 | 0-4587<br>4588-9830<br>9831-30146<br>30347-39976<br>39977-60292<br>60293-65535 | 0-4<br>5-8<br>9-47<br>48-57<br>58-96<br>97-100 | Green-Magenta point<br>Neutral/No effect<br>-100 green<br>-99 - -1 green<br>No effect<br>+1 - +99 green<br>+100 green |
| 7-8 | 0-65535 | 0-100 | Crossfade to Color<br>From white to RGBW |
| 9-10 | 0-65535 | 0-100 | red |
| 11-12 | 0-65535 | 0-100 | green |
| 13-14 | 0-65535 | 0-100 | Blue |
| 15-16 | 0-65535 | 0-100 | Cool white |
| 17-18 | 0-65535 | 0-100 | Warm white |
| 19 | 0-9<br><br>10-57<br>58-105<br>106-153<br>154-201<br>202-249<br>251-255 | 0-3<br><br>4-22<br>23-41<br>42-60<br>61-78<br>79-97<br>99-100 | Fan control<br>Use fan mode setting of fixture menu<br>Low speed<br>Low-medium speed<br>Medium speed<br>Medium-high speed<br>Fan at full speed<br>Fan off |
| 20 | 0-19<br>20-255 | 0-7<br>8-100 | Light strobe<br>No effect<br>1 flash/s - 25 flashes/s |

3. CCT & HSI 8bit (8CH)

| CH | value | % | function |
|---|---|---|---|
| 1 | 0-255 | 0-100 | Dimmer(0%-100%) |
| 2 | 0-255 | 0-100 | CCT (2700K-10000K) |
| 3 | 0-10<br>11-20<br>21-119<br>120-145<br>146-244<br>245-255 | 0-4<br>5-8<br>9-47<br>48-57<br>58-96<br>97-100 | Green-Magenta point<br>Neutral/No effect<br>-100 green<br>-99 - -1 green<br>No effect<br>+1 - +99 green<br>+100 green |
| 4 | 0-255 | 0-100 | Crossfade to Color<br>From white to RGBW |
| 5 | 0-255 | 0-100 | HUE(0-360°) |

| | | | |
|---|---|---|---|
| 6 | 0-255 | 0-100 | saturation(0-100%) |
| 7 | 0-9<br>10-57<br>58-105<br>106-153<br>154-201<br>202-249<br>251-255 | 0-3<br>4-22<br>23-41<br>42-60<br>61-78<br>79-97<br>99-100 | Fan control<br>Use fan mode setting of fixture menu<br>Low speed<br>Low-medium speed<br>Medium speed<br>Medium-high speed<br>Fan at full speed<br>Fan off |
| 8 | 0-19<br>20-255 | 0-7<br>8-100 | Light strobe<br>No effect<br>1 flash/s - 25 flashes/s |

4. CCT & HSI 16bit (14CH)

| CH | value | % | function |
|---|---|---|---|
| 1-2 | 0-65535 | 0-100 | Dimmer (0%-100%) |
| 3-4 | 0-65535 | 0-100 | CCT(2700K-10000K) |
| 5-6 | 0-4587<br>4588-9830<br>9831-30146<br>30347-39976<br>39977-60292<br>60293-65535 | 0-4<br>5-8<br>9-47<br>48-57<br>58-96<br>97-100 | Green-Magenta point<br>Neutral/No effect<br>-100 green<br>-99 - -1 green<br>No effect<br>+1 - +99 green<br>+100 green |
| 7-8 | 0-65535 | 0-100 | Crossfade to Color<br>From white to RGBW |
| 9-10 | 0-65535 | 0-100 | HUE(0-360°) |
| 11-12 | 0-65535 | 0-100 | saturation(0-100%) |
| 13 | 0-9<br>10-57<br>58-105<br>106-153<br>154-201<br>202-249<br>251-255 | 0-3<br>4-22<br>23-41<br>42-60<br>61-78<br>79-97<br>99-100 | Fan control<br>Use fan mode setting of fixture menu<br>Low speed<br>Low-medium speed<br>Medium speed<br>Medium-high speed<br>Fan at full speed<br>Fan off |
| 14 | 0-19<br>20-255 | 0-7<br>8-100 | Light strobe<br>No effect<br>1 flash/s - 25 flashes/s |

5. CCT 8bit (5CH)

| CH | value | % | function |
|---|---|---|---|
| 1 | 0-255 | 0-100 | Dimmer (0%-100%) |
| 2 | 0-255 | 0-100 | CCT (2700K-10000K) |
| 3 | | | Green-Magenta point |
| | 0-10 | 0-4 | Neutral/No effect |
| | 11-20 | 5-8 | -100 green |
| | 21-119 | 9-47 | -99 - -1 green |
| | 120-145 | 48-57 | No effect |
| | 146-244 | 58-96 | +1 - +99 green |
| | 245-255 | 97-100 | +100 green |
| 4 | | | Fan control |
| | 0-9 | 0-3 | Use fan mode setting of fixture menu |
| | 10-57 | 4-22 | Low speed |
| | 58-105 | 23-41 | Low-medium speed |
| | 106-153 | 42-60 | Medium speed |
| | 154-201 | 61-78 | Medium-high speed |
| | 202-249 | 79-97 | Fan at full speed |
| | 251-255 | 99-100 | Fan off |
| 5 | | | Light strobe |
| | 0-19 | 0-7 | No effect |
| | 20-255 | 8-100 | 1 flash/s - 25 flashes/s |

6. CCT 16bit (8CH)

| CH | value | % | function |
|---|---|---|---|
| 1-2 | 0-65535 | 0-100 | Dimmer (0%-100%) |
| 3-4 | 0-65535 | 0-100 | CCT (2700K-10000K) |
| 5-6 | | | Green-Magenta point |
| | 0-5000 | 0-4 | Neutral/No effect |
| | 5001-10000 | 5-8 | -100 green |
| | 10001-29999 | 9-47 | -99 - -1 green |
| | 30000-40000 | 48-57 | No effect |
| | 40001-59999 | 58-96 | +1 - +99 green |
| | 60000-65535 | 97-100 | +100 green |
| 7 | | | Fan control |
| | 0-9 | 0-3 | Use fan mode setting of fixture menu |
| | 10-57 | 4-22 | Low speed |
| | 58-105 | 23-41 | Low-medium speed |
| | 106-153 | 42-60 | Medium speed |
| | 154-201 | 61-78 | Medium-high speed |

| | | | |
|---|---|---|---|
| | 202-249<br>251-255 | 79-97<br>99-100 | Fan at full speed<br>Fan off |
| 8 | 0-19<br>20-255 | 0-7<br>8-100 | Light strobe<br>No effect<br>1 flash/s - 25 flashes/s |

7. HSI 8bit (5CH)

| CH | value | % | function |
|---|---|---|---|
| 1 | 0-255 | 0-100 | Dimmer (0%-100%) |
| 2 | 0-255 | 0-100 | HUE(0-360°) |
| 3 | 0-255 | 0-100 | saturation(0-100%) |
| 4 | 0-9<br>10-57<br>58-105<br>106-153<br>154-201<br>202-249<br>251-255 | 0-3<br>4-22<br>23-41<br>42-60<br>61-78<br>79-97<br>99-100 | Fan control<br>Use fan mode setting of fixture menu<br>Low speed<br>Low-medium speed<br>Medium speed<br>Medium-high speed<br>Fan at full speed<br>Fan off |
| 5 | 0-19<br>20-255 | 0-7<br>8-100 | Light strobe<br>No effect<br>1 flash/s - 25 flashes/s |

8.HSI 16bit (8CH)

| CH | value | % | function |
|---|---|---|---|
| 1-2 | 0-65535 | 0-100 | Dimmer (0%-100%) |
| 3-4 | 0-65535 | 0-100 | HUE(0-360°) |
| 5-6 | 0-65535 | 0-100 | Saturation(0-100%) |
| 7 | 0-9<br>10-57<br>58-105<br>106-153<br>154-201<br>202-249<br>251-255 | 0-3<br>4-22<br>23-41<br>42-60<br>61-78<br>79-97<br>99-100 | Fan control<br>Use fan mode setting of fixture menu<br>Low speed<br>Low-medium speed<br>Medium speed<br>Medium-high speed<br>Fan at full speed<br>Fan off |

| | | | |
|---|---|---|---|
| 8 | 0-19<br>20-255 | 0-7<br>8-100 | Light strobe<br>No effect<br>1 flash/s - 25 flashes/s |

9.RGBCW 8bit (8CH)

| CH | value | % | function |
|---|---|---|---|
| 1 | 0-255 | 0-100 | Dimmer (0%-100%) |
| 2 | 0-255 | 0-100 | red |
| 3 | 0-255 | 0-100 | green |
| 4 | 0-255 | 0-100 | blue |
| 5 | 0-255 | 0-100 | Cool white |
| 6 | 0-255 | 0-100 | Warm white |
| 7 | 0-9<br><br>10-57<br>58-105<br>106-153<br>154-201<br>202-249<br>251-255 | 0-3<br><br>4-22<br>23-41<br>42-60<br>61-78<br>79-97<br>99-100 | Fan control<br>Use fan mode setting of fixture menu<br>Low speed<br>Low-medium speed<br>Medium speed<br>Medium-high speed<br>Fan at full speed<br>Fan off |
| 8 | 0-19<br>20-255 | 0-7<br>8-100 | Light strobe<br>No effect<br>1 flash/s - 25 flashes/s |

10.RGBW 16bit (14CH)

| CH | value | % | function |
|---|---|---|---|
| 1-2 | 0-65535 | 0-100 | Dimmer (0%-100%) |
| 3-4 | 0-65535 | 0-100 | red |
| 5-6 | 0-65535 | 0-100 | green |
| 7-8 | 0-65535 | 0-100 | blue |
| 9-10 | 0-65535 | 0-100 | Cool white |
| 11-12 | 0-65535 | 0-100 | Warm white |
| 13 | 0-9<br><br>10-57<br>58-105<br>106-153<br>154-201<br>202-249<br>251-255 | 0-3<br><br>4-22<br>23-41<br>42-60<br>61-78<br>79-97<br>99-100 | Fan control<br>Use fan mode setting of fixture menu<br>Low speed<br>Low-medium speed<br>Medium speed<br>Medium-high speed<br>Fan at full speed<br>Fan off |

| | | | |
|---|---|---|---|
| 14 | 0-19<br>20-255 | 0-7<br>8-100 | Light strobe<br>No effect<br>1 flash/s - 25 flashes/s |

11.XY 8bit (5CH)

| CH | value | % | function |
|---|---|---|---|
| 1 | 0-255 | 0-100 | Master intensity<br>0% (closed)-100%(open) |
| 2 | 0-255 | 0-100 | X coordinate |
| 3 | 0-255 | 0-100 | Y coordinate |
| 4 | 0-9<br>10-57<br>58-105<br>106-153<br>154-201<br>202-249<br>251-255 | 0-3<br>4-22<br>23-41<br>42-60<br>61-78<br>79-97<br>99-100 | Fan control<br>Use fan mode setting of fixture menu<br>Low speed<br>Low-medium speed<br>Medium speed<br>Medium-high speed<br>Fan at full speed<br>Fan off |
| 5 | 0-19<br>20-255 | 0-7<br>8-100 | Light strobe<br>No effect<br>1 flash/s - 25 flashes/s |

12.XY 16bit (8CH)

| CH | value | % | function |
|---|---|---|---|
| 1-2 | 0-65535 | 0-100 | Master intensity<br>0% (closed)-100%(open) |
| 3-4 | 0-65535 | 0-100 | X coordinate |
| 5-6 | 0-65535 | 0-100 | Y coordinate |
| 7 | 0-9<br>10-57<br>58-105<br>106-153<br>154-201<br>202-249<br>251-255 | 0-3<br>4-22<br>23-41<br>42-60<br>61-78<br>79-97<br>99-100 | Fan control<br>Use fan mode setting of fixture menu<br>Low speed<br>Low-medium speed<br>Medium speed<br>Medium-high speed<br>Fan at full speed<br>Fan off |
| 8 | 0-19<br>20-255 | 0-7<br>8-100 | Light strobe<br>No effect<br>1 flash/s - 25 flashes/s |

13.RGBCW 8bit 12CH

| CH | value | % | function |
|---|---|---|---|
| 1 | 0-255 | 0-100 | Dimmer (0%-100%) |
| 2 | 0-255 | 0-100 | Red1 |
| 3 | 0-255 | 0-100 | Green1 |
| 4 | 0-255 | 0-100 | Blue1 |
| 5 | 0-255 | 0-100 | Cool white1 |
| 6 | 0-255 | 0-100 | Warm white1 |
| 7 | 0-255 | 0-100 | Red2 |
| 8 | 0-255 | 0-100 | Green2 |
| 9 | 0-255 | 0-100 | Blue2 |
| 10 | 0-255 | 0-100 | Cool white2 |
| 11 | 0-255 | 0-100 | Warm white2 |
| 12 | | | Fan control |
| | 0-9 | 0-3 | Use fan mode setting of fixture menu |
| | 10-57 | 4-22 | Low speed |
| | 58-105 | 23-41 | Low-medium speed |
| | 106-153 | 42-60 | Medium speed |
| | 154-201 | 61-78 | Medium-high speed |
| | 202-249 | 79-97 | Fan at full speed |
| | 251-255 | 99-100 | Fan off |

## 6.ULTIMATE DMX :

1.ULTIMATE DMX 8bit - CCT MODE 6CH

| CH | value | % | function |
|---|---|---|---|
| 1 | 0-255 | 0-100 | Dimmer (0%-100%) |
| 2 | | | Control mode |
| | 0-31 | 0-12 | CCT mode |
| | 32-63 | 13-24 | HSI mode |
| | 64-95 | 25-37 | RGBW mode |
| | 96-127 | 38-50 | XY coordinate mode |
| | 128-159 | 51-62 | GEL mode |
| | 160-191 | 63-75 | Special effect mode |
| | 192-255 | 76-100 | Reserved for future use |
| 3 | 0-255 | 0-100 | CCT(2700K-10000K) |

| | | | |
|---|---|---|---|
| 4 | | | Green-Magenta point |
| | 0-10 | 0-4 | Neutral/No effect |
| | 11-20 | 5-8 | -100 green |
| | 21-119 | 9-47 | -99 - -1 green |
| | 120-145 | 48-57 | No effect |
| | 146-244 | 58-96 | +1 - +99 green |
| | 245-255 | 97-100 | +100 green |
| 5 | | | Fan control |
| | 0-9 | 0-3 | Use fan mode setting of fixture menu |
| | 10-57 | 4-22 | Low speed |
| | 58-105 | 23-41 | Low-medium speed |
| | 106-153 | 42-60 | Medium speed |
| | 154-201 | 61-78 | Medium-high speed |
| | 202-249 | 79-97 | Fan at full speed |
| | 251-255 | 99-100 | Fan off |
| 6 | | | Light strobe |
| | 0-19 | 0-7 | No effect |
| | 20-255 | 8-100 | 1 flash/s - 25 flashes/s |

2. ULTIMATE DMX 8bit - HSI MODE 6CH

| CH | value | % | function |
|---|---|---|---|
| 1 | 0-255 | 0-100 | Dimmer (0%-100%) |
| 2 | | | Control mode |
| | 0-31 | 0-12 | CCT mode |
| | 32-63 | 13-24 | HSI mode |
| | 64-95 | 25-37 | RGBW mode |
| | 96-127 | 38-50 | XY coordinate mode |
| | 128-159 | 51-62 | GEL mode |
| | 160-191 | 63-75 | Special effect mode |
| | 192-255 | 76-100 | Reserved for future use |
| 3 | 0-255 | 0-100 | HUE(0-360°) |
| 4 | 0-255 | 0-100 | Saturation(0-100%) |
| 5 | | | Fan control |
| | 0-9 | 0-3 | Use fan mode setting of fixture menu |
| | 10-57 | 4-22 | Low speed |
| | 58-105 | 23-41 | Low-medium speed |
| | 106-153 | 42-60 | Medium speed |
| | 154-201 | 61-78 | Medium-high speed |
| | 202-249 | 79-97 | Fan at full speed |
| | 251-255 | 99-100 | Fan off |

| | | | |
|---|---|---|---|
| 6 | 0-19<br>20-255 | 0-7<br>8-100 | Light strobe<br>No effect<br>1 flash/s - 25 flashes/s |

3.ULTIMATE DMX 8bit - RGBW MODE

| CH | value | % | function |
|---|---|---|---|
| 1 | 0-255 | 0-100 | Dimmer (0%-100%) |
| 2 | 0-31<br>32-63<br>64-95<br>96-127<br>128-159<br>160-191<br>192-255 | 0-12<br>13-24<br>25-37<br>38-50<br>51-62<br>63-75<br>76-100 | Control mode<br>CCT mode<br>HSI mode<br>RGBW mode<br>XY coordinate mode<br>GEL mode<br>Special effect mode<br>Reserved for future use |
| 3 | 0-255 | 0-100 | red |
| 4 | 0-255 | 0-100 | green |
| 5 | 0-255 | 0-100 | blue |
| 6 | 0-255 | 0-100 | white |
| 7 | 0-9<br>10-57<br>58-105<br>106-153<br>154-201<br>202-249<br>251-255 | 0-3<br>4-22<br>23-41<br>42-60<br>61-78<br>79-97<br>99-100 | Fan control<br>Use fan mode setting of fixture menu<br>Low speed<br>Low-medium speed<br>Medium speed<br>Medium-high speed<br>Fan at full speed<br>Fan off |
| 8 | 0-19<br>20-255 | 0-7<br>8-100 | Light strobe<br>No effect<br>1 flash/s - 25 flashes/s |

4.ULTIMATE DMX 8bit - XY MODE 6CH

| CH | value | % | function |
|---|---|---|---|
| 1 | 0-255 | 0-100 | Master intensity<br>0% (closed)-100%(open) |
| 2 | 0-31<br>32-63<br>64-95 | 0-12<br>13-24<br>25-37 | Control mode<br>CCT mode<br>HSI mode<br>RGBW mode |

| | | | |
|---|---|---|---|
| | 96-127<br>128-159<br>160-191<br>192-255 | 38-50<br>51-62<br>63-75<br>76-100 | XY coordinate mode<br>GEL mode<br>Special effect mode<br>Reserved for future use |
| 3 | 0-255 | 0-100 | X coordinate |
| 4 | 0-255 | 0-100 | Y coordinate |
| 5 | 0-9<br>10-57<br>58-105<br>106-153<br>154-201<br>202-249<br>251-255 | 0-3<br>4-22<br>23-41<br>42-60<br>61-78<br>79-97<br>99-100 | Fan control<br>Use fan mode setting of fixture menu<br>Low speed<br>Low-medium speed<br>Medium speed<br>Medium-high speed<br>Fan at full speed<br>Fan off |
| 6 | 0-19<br>20-255 | 0-7<br>8-100 | Light strobe<br>No effect<br>1 flash/s - 25 flashes/s |

5.ULTIMATE DMX 8bit - GEL MODE 6CH

| CH | value | % | function |
|---|---|---|---|
| 1 | 0-255 | 0-100 | Master intensity<br>0% (closed)-100%(open) |
| 2 | 0-31<br>32-63<br>64-95<br>96-127<br>128-159<br>160-191<br>192-255 | 0-12<br>13-24<br>25-37<br>38-50<br>51-62<br>63-75<br>76-100 | Control mode<br>CCT mode<br>HSI mode<br>RGBW mode<br>XY coordinate mode<br>GEL mode<br>Special effect mode<br>Reserved for future use |
| 3 | 0-127<br>128-255 | 0-50<br>51-100 | GEL CCT selection<br>3200K<br>5600K |
| 4 | 0-255 | 0-100 | Gel number (check below Rosco color number chart) |
| 5 | 0-9<br>10-57<br>58-105<br>106-153 | 0-3<br>4-22<br>23-41<br>42-60 | Fan control<br>Use fan mode setting of fixture menu<br>Low speed<br>Low-medium speed<br>Medium speed |

| | | | |
|---|---|---|---|
| | 154-201<br>202-249<br>251-255 | 61-78<br>79-97<br>99-100 | Medium-high speed<br>Fan at full speed<br>Fan off |
| 6 | 0-19<br>20-255 | 0-7<br>8-100 | Light strobe<br>No effect<br>1 flash/s - 25 flashes/s |

Attachment: GEL color number chart：

| value | % | Gel name |
|---|---|---|
| 0-5 | 0-2 | DOUBLE CTB |
| 6-11 | 3-4 | FULL CTB |
| 12-17 | 5-7 | 1/2 CTB |
| 18-23 | 8-9 | 1/4 CTB |
| 24-29 | 10-11 | 1/8 CTB |
| 30-35 | 12-14 | DOUBLE CTO |
| 36-41 | 15-16 | FULL CTO |
| 42-47 | 17-18 | 1/2 CTO |
| 48-53 | 19-21 | 1/4 CTO |
| 54-59 | 22-23 | 1/8 CTO |
| 60-65 | 24-25 | Blue 15 |
| 66-71 | 26-28 | Blue 30 |
| 72-77 | 29-30 | Blue 60 |
| 78-83 | 31-33 | Blue 90 |
| 84-89 | 34-35 | Cyan 07 |
| 90-95 | 36-37 | Cyan 15 |
| 96-101 | 38-39 | Cyan 30 |
| 102-107 | 40-42 | Cyan 60 |
| 108-113 | 43-44 | Cyan 90 |
| 114-119 | 45-46 | Green 15 |
| 120-125 | 47-49 | Green 30 |
| 126-131 | 50-51 | Green 60 |
| 132-137 | 52-53 | Green 90 |
| 138-143 | 54-56 | Yellow 15 |
| 144-149 | 57-58 | Yellow 30 |
| 150-155 | 59-60 | Yellow 60 |
| 156-161 | 61-63 | Yellow 90 |
| 162-167 | 64-65 | Red 15 |
| 168-173 | 66-67 | Red 30 |
| 174-179 | 68-69 | Red 60 |
| 180-185 | 70-72 | Red 90 |
| 186-191 | 73-74 | Magenta 15 |

| | | |
|---|---|---|
| 192-197 | 75-76 | Magenta 30 |
| 198-203 | 77-79 | Magenta 60 |
| 204-209 | 80-81 | Magenta 90 |
| 210-215 | 82-84 | Pink 15 |
| 216-221 | 85-86 | Pink 30 |
| 222-227 | 87-88 | Pink 60 |
| 228-233 | 89-91 | Pink 90 |
| 234-239 | 92-93 | Lavender 15 |
| 240-245 | 94-95 | Lavender 30 |
| 246-251 | 96-98 | Lavender 60 |
| 252-255 | 99-100 | Lavender 90 |

6.ULTIMATE DMX 8bit - EFFECT MODE 9CH

| CH | value | % | function |
|---|---|---|---|
| 1 | 0-255 | 0-100 | Master intensity<br>0% (closed)-100%(open) |
| 2 | | | Control mode |
| | 0-31 | 0-12 | CCT mode |
| | 32-63 | 13-24 | HSI mode |
| | 64-95 | 25-37 | RGBW mode |
| | 96-127 | 38-50 | XY coordinate mode |
| | 128-159 | 51-62 | GEL mode |
| | 160-191 | 63-75 | Special effect mode |
| | 192-255 | 76-100 | Reserved for future use |
| 3 | | | Effect selection |
| | 0-9 | 0-4 | No effect |
| | 10-19 | 5-7 | candle |
| | 20-29 | 8-11 | Cloud passing |
| | 30-39 | 12-15 | club |
| | 40-49 | 16-19 | Color chase |
| | 50-59 | 20-23 | Cop car |
| | 60-69 | 24-27 | fire |
| | 70-79 | 28-31 | fireworks |
| | 80-89 | 32-35 | strobe |
| | 90-99 | 36-39 | lightning |
| | 100-109 | 40-43 | paparazzi |
| | 110-119 | 44-47 | pulsing |
| | 120-129 | 48-51 | television |
| | 130-255 | 52-100 | Reserved for future use |
| 4 | 0-255 | 0-100 | Effect Parameter 1<br>(check below table) |
| 5 | 0-255 | 0-100 | Effect Parameter 2 |
| 6 | 0-255 | 0-100 | Effect Parameter 3 |

| | | | |
|---|---|---|---|
| 7 | 0-255 | 0-100 | Effect Parameter 4 |
| 8 | 0-255 | 0-100 | Effect Parameter 5 |
| 9 | | | Fan control |
| | 0-9 | 0-3 | Use fan mode setting of fixture menu |
| | 10-57 | 4-22 | Low speed |
| | 58-105 | 23-41 | Low-medium speed |
| | 106-153 | 42-60 | Medium speed |
| | 154-201 | 61-78 | Medium-high speed |
| | 202-249 | 79-97 | Fan at full speed |
| | 251-255 | 99-100 | Fan off |

## 7, Special effects parameter:

candle：

| CH | Effect Parameter | value | function |
|---|---|---|---|
| CH4 | | | CCT range |
| | 1 | 0-84 | 2500K-2800K |
| | | 85-170 | 2800K-3100K |
| | | 171-255 | 3100K-3400K |
| CH5 | 2 | 0-255 | speed |
| CH6 | 3 | N/A | |
| CH7 | 4 | N/A | |
| CH8 | 5 | N/A | |

Cloud passing：

| CH | Effect Parameter | value | function |
|---|---|---|---|
| CH4 | 1 | 0-255 | speed |
| CH5 | 2 | N/A | |
| CH6 | 3 | N/A | |
| CH7 | 4 | N/A | |
| CH8 | 5 | N/A | |

Club lights：

| CH | Effect Parameter | value | function |
|---|---|---|---|
| CH4 | | | Color variety |
| | | 0-31 | 3 colors |
| | 1 | 32-63 | 6 colors |
| | | 64-95 | 9 colors |
| | | 96-127 | 12 colors |
| | | 128-159 | 15 colors |
| | | 160-191 | 18 colors |
| | | 192-223 | 21 colors |
| | | 224-255 | 24 colors |

| | | | |
|---|---|---|---|
| CH5 | 2 | 0-255 | speed |
| CH6 | 3 | N/A | |
| CH7 | 4 | N/A | |
| CH8 | 5 | N/A | |

Color chase：

| CH | Effect Parameter | value | function |
|---|---|---|---|
| CH4 | 1 | 0-255 | Offset value<br>Every 25 DMX values is a new offset |
| CH5 | 2 | 0-255 | speed |
| CH6 | 3 | N/A | |
| CH7 | 4 | N/A | |
| CH8 | 5 | N/A | |

Cop car：

| CH | Effect Parameter | value | function |
|---|---|---|---|
| CH4 | 1 | | Color combinations |
| | | 0-50 | blue |
| | | 51-100 | red |
| | | 101-150 | red&blue |
| | | 151-200 | blue&white |
| | | 201-255 | red&white |
| CH5 | 2 | | Flash pattern |
| | | 0-31 | Single flash |
| | | 32-63 | Double flash |
| | | 64-95 | all flash three times |
| | | 96-127 | flash three times |
| | | 128-159 | Quad flash |
| | | 160-191 | Cycle all |
| CH6 | 3 | N/A | |
| CH7 | 4 | N/A | |
| CH8 | 5 | N/A | |

fire：

| CH | Effect Parameter | value | function |
|---|---|---|---|
| CH4 | 1 | | CCT range |
| | | 0-84 | 2500K-2600K |
| | | 85-170 | 2600K-2700K |
| | | 171-255 | 2700K-2800K |
| CH5 | 2 | 0-255 | speed |

| | | | |
|---|---|---|---|
| CH6 | 3 | N/A | |
| CH7 | 4 | N/A | |
| CH8 | 5 | N/A | |

fireworks：

| CH | Effect Parameter | value | function |
|---|---|---|---|
| CH4 | 1 | | Color variety |
| | | 0-31 | 3 colors |
| | | 32-63 | 6 colors |
| | | 64-95 | 9 colors |
| | | 96-127 | 12 colors |
| | | 128-159 | 15 colors |
| | | 160-191 | 18 colors |
| | | 192-223 | 21 colors |
| | | 224-255 | 24 colors |
| CH5 | 2 | 0-255 | speed |
| CH6 | 3 | N/A | |
| CH7 | 4 | N/A | |
| CH8 | 5 | N/A | |

strobe：

| CH | Effect Parameter | value | function |
|---|---|---|---|
| CH4 | 1 | 0-255 | speed |
| CH5 | 2 | N/A | |
| CH6 | 3 | N/A | |
| CH7 | 4 | N/A | |
| CH8 | 5 | N/A | |

lightning：

| CH | Effect Parameter | value | function |
|---|---|---|---|
| CH4 | 1 | | CCT range |
| | | 0-255 | (2700K-10000K) |
| CH5 | 2 | | Green-Magenta point |
| | | 0-10 | Neutral/No effect |
| | | 11-20 | -100 green |
| | | 21-119 | -99 - -1 green |
| | | 120-145 | No effect |
| | | 146-244 | +1 - +99 green |
| | | 245-255 | +100 green |
| CH6 | 3 | 0-255 | speed |
| CH7 | 4 | N/A | |
| CH8 | 5 | N/A | |

paparazzi：

| CH | Effect Parameter | value | function |
|---|---|---|---|
| CH4 | 1 | 0-255 | speed |
| CH5 | 2 | 0-127<br>128-255 | Flash type<br>Type 1<br>Type 2 |
| CH6 | 3 | N/A | |
| CH7 | 4 | N/A | |
| CH8 | 5 | N/A | |

pulsing：

| CH | Effect Parameter | value | function | |
|---|---|---|---|---|
| CH4 | 1 | 0-127<br>128-255 | mode<br>CCT<br>HSI | |
| CH5 | 2 | 0-255 | CCT range<br>(2700K-10000K) | HUE<br>(0-360° ) |
| CH6 | 3 | 0-255 | Green-Magenta point<br>0-10，Neutral/No effect<br>11-20，-100 green<br>21-119，-99 - -1 green<br>120-145,Neutral/No effect<br>146-244，+1 - +99 green<br>245-255，+100 green | saturation<br>(0-100) |
| CH7 | 4 | 0-255 | speed | |
| CH8 | 5 | N/A | | |

television：

| CH | Effect Parameter | value | function |
|---|---|---|---|
| CH4 | 1 | 0-255 | speed |
| CH5 | 2 | N/A | |
| CH6 | 3 | N/A | |
| CH7 | 4 | N/A | |
| CH8 | 5 | N/A | |

## 8. Troubleshooting

Following are a few common problems that may occur during operation. Here are some suggestions for easy troubleshooting:

A. The fixture does not work, no light output, fan no work

1. Check the connection of power.
2. Measure the mains voltage on the main connector.
3. Check the power indicator

B. Not responding to DMX controller

1. DMX LED should be on. If not, check DMX connectors, cables to see if link properly.
2. If the DMX LED is on and no response to the channel, check the address settings and DMX polarity.
3. If you have intermittent DMX signal problems, check the pins on connectors or on PCB of the fixture or the previous one.
4. Try to use another DMX controller.
5. Check if the DMX cables run near or run alongside to high voltage cables that may cause damage or interference to DMX interface circuit.

C. Some fixtures don’t respond to the easy controller

1. You may have a break in the DMX cabling.
2. Check the LED for the response of the master/ slave mode signal.