DIAMOND2425IP

RGBL Pixel Wash Moving Head IP65

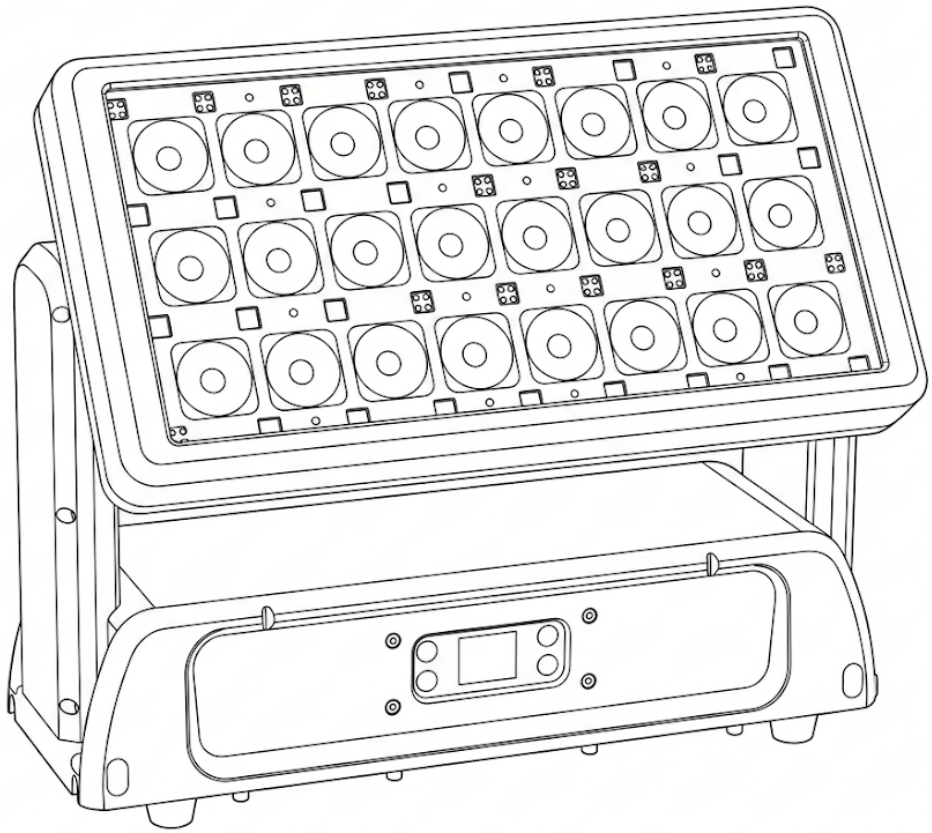

USER MANUAL

- Be sure to read the USER MANUAL carefully before using this product.
- Be sure to keep the USER MANUAL properly for future needs.
- Use this product correctly when you can fully understand the User Manual

SAFETY PRECAUTIONS

This fixture is a sophisticated piece of electronic equipment.To guarantee a smooth operation,it is important to follow all instructions and guidelines in this manual. Professional is not responsible for injuries and/or damages resulting from the misuse of this fixture due to the disregard of the information printed in this manual.Only qualified and/or certified personnel should perform installation of this fixture and only the original rigging parts included with this fixture should be used for installation.Any modifications to the fixture and/ or the included mounting hardware will void the original manufacturer's warranty and increase the risk of damage and/or personal injury.

PROTECTION CLASS 1 - FIXTURE MUST BE PROPERLY GROUNDED.

THERE ARE NO USER SERVICEABLE PARTS INSIDE THIS UNIT. DO NOT ATTEMPT ANY REPAIRS YOURSELF, AS DOING SO WILL VOID YOUR MANUFACTURER' S WARRANTY. DAMAGES RESULTING FROM MODIFICATIONS TO THIS FIXTURE AND/ OR THE DISREGARD OF SAFETY INSTRUCTIONS AND GUIDELINES IN THIS MANUAL VOID THE MANUFACTURER' S WARRANTY AND ARE NOT SUBJECT TO ANY WARRANTY CLAIMS AND/ OR REPAIRS.

DO NOT PLUG FIXTURE INTO A DIMMER PACK!
NEVER OPEN THIS FIXTURE WHILE IN USE!
UNPLUG POWER BEFORE SERVICING FIXTURE!
NEVER TOUCH FIXTURE DURING OPERATION, AS IT MAY BE HOT! KEEP FLAMMABLE MATERIALS AWAY FROM FIXTURE!

NEVER LOOK DIRECTLY INTO THE LIGHT SOURCE!
RETINA INJURY RISK - MAY INDUCE BLINDNESS!
SENSITIVE PERSONS MAY SUFFER AN EPILEPTIC SHOCK!

ENSURE ALL CONNECTIONS AND END CAPS ARE PROPERLY SEALED WITH A DIELECTRIC GREASE (AVAILABLE AT MOST ELECTRICAL SUPPLIERS) TO PREVENT WATER CORROSION AND/ OR ELECTRICAL SHORT CIRCUIT.

MINIMUM DISTANCE TO OBJECTS/SURFACES
MUST BE 3.3 FEET (1 METER)
MAXIMUM TEMP OF EXTERNAL SURFACE 185° F (85°C)

MINIMUM DISTANCE OF FLAMMABLE MATERIALS FROM THE SURFACE IS 1.6 FEET (0 .5 METER)

SAFETY PRECAUTIONS

- DO NOT TOUCH the fixture housing during operation.Turn OFF the power and allow approximately 15 minutes for the fixture to cool down before servicing.
- DO NOT shake fixture, and avoid brute force when installing and/or operating fixture.
- DO NOT operate fixture if the power cord is frayed, crimped, damaged and/or if any of the power cord connectors are damaged and do not insert into the fixture securely with ease.
- NEVER force a power cord connector into the fixture.If the power cord or any of its connectors are damaged, replace it immediately with a new one of the same power rating.
- DO NOT block any air ventilation slots.
- All fan and air inlets must remain clean and never blocked.
- Allow approx.6” (15cm) between fixture and other devices or a wall for proper cooling.
- Always disconnect fixture from main power source before performing any type of service and/or cleaning procedure.
- Only handle the power cord by the plug end.Never pull out the plug by tugging the wire portion of the cord.
- During the initial operation of this fixture, a light smoke or smell may emit from the interior of the fixture. This is a normal process and is caused by excess paint in the interior of the casing burning off from the heat associated with the lamp and will decrease gradually over time.
- Consistent operational breaks will ensure fixture will function properly for many years .
- ONLY use the original packaging and materials to transport the fixture in for service.

MAINTENANCE GUIDELINES

DISCONNECT POWER BEFORE PERFORMING ANY MAINTENANCE!

CLEANING

Frequent cleaning is recommended to ensure proper function,optimized light output, and an extended life.The frequency of cleaning depends on the environment in which the fixture operates: damp,smoky or particularly dirty environments can cause greater accumulation of dirt on the fixture's optics.Periodically clean the external lens surface with a soft cloth to avoid dirt/debris accumulation.**NEVER** use alcohol, solvents, or ammonia-based cleaners .

MAINTENANCE

Regular inspections are recommended to ensure proper function and extended life.There are no user serviceable parts inside this fixture.Please refer all other service issues to an authorized our service technician.Should you need any spare parts, please order genuine parts from your local dealer.

Please refer to the following points during routine inspections:

- A detailed electric check by an approved electrical engineer every three months, to make sure the circuit contacts are in good condition and prevent overheating.

- Be sure all screws and fasteners are securely tightened at all times.Loose screws may fall out during normal operation, resulting in damage or injury as larger parts could fall.

- Check for any deformations on the housing, color lenses, rigging hardware,and rigging points (ceiling,suspension, trussing).Deformations in the housing could allow for dust to enter into the fixture.Damaged rigging points or unsecured rigging could cause the fixture to fall and seriously injure a person(s).

- Electric power supply cables must not show any damage,material fatigue or sediments.NEVER remove the ground prong from the power cable.

INSTALLATION GUIDELINES

FLAMMABLE MATERIAL WARNING

Keep fixture minimum 5.0 feet (1 .5m) away from flammable materials and/or pyrotechnics.

ELECTRICAL CONNECTIONS

A qualified electrician should be used for all electrical connections and/or installations.

MINIMUM DISTANCE TO SURFACES/OBJECTS IS 3.3 FEET (1 METER).

MINIMUM DISTANCE TO FLAMMABLE MATERIALS IS 1.6 FEET(0 .5 METER).

EXTERNAL SURFACE CAN REACH TEMPERATURES OF 185° F (85° C).

DO NOT INSTALL THE FIXTURE IF YOU ARE NOT QUALIFIED TO DO SO!

Fixture **MUST** be installed following all local,national, and country commercial electrical and construction codes and regulations.

Before rigging/mounting a single fixture or multiple fixtures to any metal truss/structure or placing the fixture(s) on any surface,a professional equipment installer **MUST** be consulted to determine if the metal truss/ structure or surface is properly certified to safely hold the combined weight of the fixture(s) , clamps, cables, and accessories.

Overhead rigging requires extensive experience,including calculating working load limits, installation material being used, and periodic safety inspection of all installation material and the fixture, among other skills. If you lack these qualifications, do not attempt the installation yourself. Improper installation can result in bodily injury.

Fixture ambient operating temperature range is -4° to 113°F (-20° to 45°C). Do not operate the fixture when the ambient temperature falls outside of this range.

Fixture(s) should be installed away from walking paths, seating areas, or areas were unauthorized personnel might reach the fixture by hand.

NEVER stand directly below the fixture(s) when rigging, removing, or servicing.

Overhead fixture installation must always be secured with a secondary safety attachment, such as an appropriately rated safety cable.

Allow approximately 15 minutes for the fixture to cool down before serving.

SYSTEM MENU

Main Menu	Sub Menu	Option/Value	Option/Value
Control	Base Control	DMX Address	001-512
		Channel Mode	15CH
			27CH
			47CH
			87CH
			255CH
		Protocol	Art-net
			sACN
			DMX
		Universe	00001-32767
	Aura Pixels Ctrl	DMX Address	001-512
		Protocol	Art-net
			sACN
		Universe	00001-32767
		Color Mode	RGB
			RGBW
	Net to DMX	No	
		YES	
	Manual	Tilt	
		Tilt Fine	
		...	
		speed	
Network	IP Mode	DHCP	
		Static	
	IP Address	000.000.000.000	
	Subnet Mask	255.000.000.000	
Settings	Display	Always ON	
		10 sec	
		30 sec	
		1min	
	Display Reversal	NO	
		YES	
	Key Lock	NO	
		YES	
	DMX Fault	Hold	
		Blacklout	
	Dimmer Speed	Standard	
		Fast	
		Slow	
	Dimmer Curve	Linear	
		Square	
		S-Shape	
	LED Frequency	4 KHz	

		8 KHz	
		16 KHz	
		24 KHz	
	Red Shift	Off	
		On	
	Pixel Invert	Off	
		On	
	Fan Mode	Auto	
		Silent	
		Full	
	Tilt Setting	Reversal	
		Calibration	
		Encoder	
	Factory Reset	No	
		Yes	
Information	Error Info	*	
	Temperature	*℃	
	Version	*	
	UID	*	

DMX CHART

15CH Mode

Channel	Value	Function	Description
1CH	0-255	Tilt Rotating	0° -210°
2CH	0-255	Tilt Rotating Fine	16 bit adjustable
3CH	0-255	Frosted glass	0%-100% (from clear to frosted, linear increase)
4CH	0-255	Main LEDs Dimmer	Dark to Bright
5CH	0-255	Main LEDs Fine	16 bit Dimmer
4CH	0-255	Aura LEDs Dimmer	Dark to Bright
5CH	0-255	Aura LEDs Fine	16 bit Dimmer
6CH	0-5	Main LEDs Strobe	Strobe Open
	6-10		Strobe Closed
	011-035		Puls Random,slow->fast
	036-060		Ramp up Random,slow->fast
	061-085		Ramp down Randon,slow->fast
	086-110		Random Strobe Effect
	111-135		Strobe Break Effect
	136-250		Strobe slow ->fast
	251-255		Strobe Open
	0-5	Aura LEDs Strobe	Strobe Open
	6-10		Strobe Closed
	011-035		Puls Random,slow->fast
	036-060		Ramp up Random,slow->fast
	061-085		Ramp down Randon,slow->fast
	086-110		Random Strobe Effect
	111-135		Strobe Break Effect
	136-250		Strobe slow ->fast
	251-255		Strobe Open
7CH	0-255	Main LEDs Red	Dark to Bright
8CH	0-255	Main LEDs Green	Dark to Bright
9CH	0-255	Main LEDs Blue	Dark to Bright
10CH	0-255	Main LEDs Lime	Dark to Bright
11CH	0-255	Aura LEDs Red	Dark to Bright
12CH	0-255	Aura LEDs Green	Dark to Bright
13CH	0-255	Aura LEDs Blue	Dark to Bright
14CH	0-255	Aura LEDs WW	Dark to Bright
15CH	000-015	DMX Mode	Pixel Controlled
	016-238	Mixed Mode	
	239-255	ArtNet Mode	

27CH Mode

Channel	Value	Function	Description
1CH	0-255	Tilt Rotating	0° -210°
2CH	0-255	Tilt Rotating Fine	16 bit adjustable
3CH	0-255	Tilt Motor Speed	Fast to slow
4CH -	0-4	/	
	5-9	The display stays on	
	10-14	Display shows 10S	
	15-19	Display shows 30S	
	20-24	Display shows 1min	
	25-29	Screen lock off	
	30-34	Screen lock on	
	35-39	Signal Hold	
	40-44	Black out	
	45-59	/	
	60-64	Standard dimming	
	65-69	Fast dimming	
	70-74	Slow dimming	
	75-84	/	
	85-89	Linear	
	90-94	Square	
	95-99	S-Shape	
	100-109	/	
	110-114	4000Hz	
	115-119	8000Hz	
	120-124	16000Hz	
	125-129	24000Hz	
	130-139	/	
	140-144	Fan Mode Auto	
	145-149	Fan Mode Silent	
	150-154	Fan Mode Full on	
	155-164	/	
	165-169	Red Drift OFF	
	170-174	Red Drift ON	
	175-179	Pixel Invert-Off	
	180-184	Pixel Invert-On	
	185-189	Tilt invert - off	
	190-194	Tilt invert - on	
	195-199	Error Correction - Off	
	200-204	Error Correction - On	
	205-209	Reset All	
	210-255	/	
5CH	0-255	Frosted glass	0%-100% (from clear to frosted, linear increase)
6CH	0-255	Main LEDs Dimmer	Dark to Bright
7CH	0-255	Main LEDs Fine	16 bit Dimmer

8CH	0-255	Aura LEDs Dimmer	Dark to Bright
9CH	0-255	Aura LEDs Fine	16 bit Dimmer
10CH	0-5	Main LEDs Strobe	Strobe Open
	6-10		Strobe Closed
	011-035		Puls Random,slow->fast
	036-060		Ramp up Random,slow->fast
	061-085		Ramp down Randon,slow->fast
	086-110		Random Strobe Effect
	111-135		Strobe Break Effect
	136-250		Strobe slow ->fast
	251-255		Strobe Open
11CH	0-5	Aura LEDs Strobe	Strobe Open
	6-10		Strobe Closed
	011-035		Puls Random,slow->fast
	036-060		Ramp up Random,slow->fast
	061-085		Ramp down Randon,slow->fast
	086-110		Random Strobe Effect
	111-135		Strobe Break Effect
	136-250		Strobe slow ->fast
	251-255		Strobe Open
12CH	0-255	Main LEDs Red	Dark to Bright
13CH	0-255	Main LEDs Green	Dark to Bright
14CH	0-255	Main LEDs Blue	Dark to Bright
15CH	0-255	Main LEDs Lime	Dark to Bright
16CH	0-255	Aura LEDs Red	Dark to Bright
17CH	0-255	Aura LEDs Green	Dark to Bright
18CH	0-255	Aura LEDs Blue	Dark to Bright
19CH	0-255	Aura LEDs WW	Dark to Bright
20CH	0-5	CTO	/
	6-21		1800K
	22-37		2000K
	38-53		2500K
	54-69		2700K
	70-85		3000K
	86-101		3200K
	102-117		3500K
	118-133		4000K
	134-149		4500K
	150-165		5000K
	166-181		5600K
	182-197		6000K
	198-213		6500K
	214-229		7200K
	230-255		8000K
21CH	000-000	Color temperature compensation	OFF
	001-127		From Magenta to OFF

	128-128		OFF
	129-255		From OFF to Green
22CH	0-45	Color Macros	/
	46-50		R=000,G=255,B=255,L=000
	51-55		R=255,G=255,B=000,L=000
	56-60		R=255,G=000,B=255,L=000
	61-65		R=156,G=126,B=000,L=000
	66-70		R=152,G=115,B=009,L=000
	71-75		R=198,G=114,B=009,L=000
	76-80		R=255,G=056,B=000,L=000
	81-85		R=255,G=135,B=000,L=000
	86-90		R=255,G=100,B=000,L=000
	91-95		R=255,G=065,B=000,L=000
	96-100		R=255,G=083,B=002,L=000
	101-105		R=255,G=112,B=000,L=141
	106-110		R=255,G=087,B=000,L=107
	111-115		R=255,G=107,B=000,L=130
	116-120		R=243,G=117,B=039,L=197
	121-125		R=000,G=255,B=135,L=000
	126-130		R=000,G=194,B=130,L=000
	131-135		R=041,G=219,B=000,L=000
	136-140		R=245,G=202,B=000,L=000
	141-145		R=237,G=163,B=000,L=000
	146-150		R=230,G=160,B=000,L=069
	151-155		R=255,G=166,B=000,L=000
	156-160		R=255,G=122,B=000,L=000
	161-165		R=255,G=141,B=031,L=000
	166-170		R=217,G=130,B=028,L=000
	171-175		R=255,G=109,B=033,L=000
	176-180		R=255,G=020,B=015,L=000
	181-185		R=051,G=255,B=051,L=000
	186-190		R=206,G=255,B=056,L=000
	191-195		R=074,G=255,B=082,L=000
	196-200		R=000,G=186,B=255,L=000
	201-205		R=206,G=255,B=000,L=000
	206-210		R=084,G=255,B=013,L=000
	211-215		R=227,G=041,B=056,L=000
	216-220		R=255,G=058,B=000,L=000
	221-225		R=255,G=197,B=061,L=000
	226-230		R=077,G=255,B=000,L=000
	231-235		R=000,G=255,B=087,L=000
	235-240		R=255,G=143,B=013,L=000
	241-245		R=253,G=171,B=026,L=000
	246-250		R=222,G=084,B=000,L=000
	251-255		R=255,G=046,B=002,L=000

23CH	0-9	Main LEDs built-in program effects	/
	10-34		Effect 1
	35-59		Effect 2
	60-84		Effect 3
	85-109		Effect 4
	110-134		Effect 5
	135-159		Effect 6
	160-184		Effect 7
	185-209		Effect 8
	210-234		Effect 9
	235-244		Effect 10
	245-255		Effect 1 ~Effect 10 Loop Play
24CH	0-255	Main LEDs built-in program effects Speed	0-127 INDEX ,128 – stop 129-191 clockwise rotation from fast to slow, 192 stop, 193-255 counterclockwise rotate slow to fast
25CH	0-9	Aura LEDs built-in program effects	/
	10-34		Effect 1
	35-59		Effect 2
	60-84		Effect 3
	85-109		Effect 4
	110-134		Effect 5
	135-159		Effect 6
	160-184		Effect 7
	185-209		Effect 8
	210-234		Effect 9
	235-244		Effect 10
	245-255		Effect 1 ~Effect 10 Loop Play
26CH	0-255	Aura LEDs built-in program effects Speed	0-127 INDEX ,128 – stop 129-191 clockwise rotation from fast to slow, 192 stop, 193-255 counterclockwise rotate slow to fast
27CH	000-015	DMX Mode	Pixel Controlled
	016-238	Mixed Mode	
	239-255	ArtNet Mode	

47CH Mode

Channel	Value	Function	Description
1CH	0-255	Tilt Rotating	0°-210°
2CH	0-255	Tilt Rotating Fine	16 bit adjustable
3CH	0-255	Tilt Motor Speed	Fast to slow
4CH	0-4	/	
	5-9	The display stays on	
	10-14	Display shows 10S	
	15-19	Display shows 30S	
	20-24	Display shows 1min	
	25-29	Screen lock off	
	30-34	Screen lock on	
	35-39	Signal Hold	
	40-44	Black out	
	45-59	/	
	60-64	Standard dimming	
	65-69	Fast dimming	
	70-74	Slow dimming	
	75-84	/	
	85-89	Linear	
	90-94	Square	
	95-99	S-Shape	
	100-109	/	
	110-114	4000Hz	
	115-119	8000Hz	
	120-124	16000Hz	
	125-129	24000Hz	
	130-139	/	
	140-144	Fan Mode Auto	
	145-149	Fan Mode Silent	
	150-154	Fan Mode Full on	
	155-164	/	
	165-169	Red Drift OFF	
	170-174	Red Drift ON	
	175-179	Pixel Invert-Off	
	180-184	Pixel Invert-On	
	185-189	Tilt invert - off	
	190-194	Tilt invert - on	
	195-199	Error Correction - Off	
	200-204	Error Correction - On	
	205-209	Reset All	
	210-255	/	
5CH	0-255	Frosted glass	0%-100% (from clear to frosted, linear increase)
6CH	0-255	Main LEDs Dimmer	Dark to Bright
7CH	0-255	Main LEDs Dimmer Fine	16 bit Dimmer

8CH	0-255	Aura LEDs Dimmer	Dark to Bright
9CH	0-255	Aura LEDs Dimmer Fine	16 bit Dimmer
10CH	0-5	Main LEDs Strobe	Strobe Open
	6-10		Strobe Closed
	011-035		Puls Random,slow->fast
	036-060		Ramp up Random,slow->fast
	061-085		Ramp down Random,slow->fast
	086-110		Random Strobe Effect
	111-135		Strobe Break Effect
	136-250		Strobe slow ->fast
	251-255		Strobe Open
11CH	0-5	Aura LEDs Strobe	Strobe Open
	6-10		Strobe Closed
	011-035		Puls Random,slow->fast
	036-060		Ramp up Random,slow->fast
	061-085		Ramp down Randon,slow->fast
	086-110		Random Strobe Effect
	111-135		Strobe Break Effect
	136-250		Strobe slow ->fast
	251-255		Strobe Open
12CH	0-5	CTO	/
	6-21		1800K
	22-37		2000K
	38-53		2500K
	54-69		2700K
	70-85		3000K
	86-101		3200K
	102-117		3500K
	118-133		4000K
	134-149		4500K
	150-165		5000K
	166-181		5600K
	182-197		6000K
	198-213		6500K
	214-229		7200K
	230-255		8000K
13CH	000-000	Color temperature compensation	OFF
	001-127		From Magenta to OFF
	128-128		OFF
	129-255		From OFF to Green
14CH	0-45	Color Macros	/
	46-50		R=000,G=255,B=255,L=000
	51-55		R=255,G=255,B=000,L=000
	56-60		R=255,G=000,B=255,L=000
	61-65		R=156,G=126,B=000,L=000
	66-70		R=152,G=115,B=009,L=000

	71-75		R=198,G=114,B=009,L=000
	76-80		R=255,G=056,B=000,L=000
	81-85		R=255,G=135,B=000,L=000
	86-90		R=255,G=100,B=000,L=000
	91-95		R=255,G=065,B=000,L=000
	96-100		R=255,G=083,B=002,L=000
	101-105		R=255,G=112,B=000,L=141
	106-110		R=255,G=087,B=000,L=107
	111-115		R=255,G=107,B=000,L=130
	116-120		R=243,G=117,B=039,L=197
	121-125		R=000,G=255,B=135,L=000
	126-130		R=000,G=194,B=130,L=000
	131-135		R=041,G=219,B=000,L=000
	136-140		R=245,G=202,B=000,L=000
	141-145		R=237,G=163,B=000,L=000
	146-150		R=230,G=160,B=000,L=069
	151-155		R=255,G=166,B=000,L=000
	156-160		R=255,G=122,B=000,L=000
	161-165		R=255,G=141,B=031,L=000
	166-170		R=217,G=130,B=028,L=000
	171-175		R=255,G=109,B=033,L=000
	176-180		R=255,G=020,B=015,L=000
	181-185		R=051,G=255,B=051,L=000
	186-190		R=206,G=255,B=056,L=000
	191-195		R=074,G=255,B=082,L=000
	196-200		R=000,G=186,B=255,L=000
	201-205		R=206,G=255,B=000,L=000
	206-210		R=084,G=255,B=013,L=000
	211-215		R=227,G=041,B=056,L=000
	216-220		R=255,G=058,B=000,L=000
	221-225		R=255,G=197,B=061,L=000
	226-230		R=077,G=255,B=000,L=000
	231-235		R=000,G=255,B=087,L=000
	235-240		R=255,G=143,B=013,L=000
	241-245		R=253,G=171,B=026,L=000
	246-250		R=222,G=084,B=000,L=000
	251-255		R=255,G=046,B=002,L=000
15CH	0-9	Main LEDs built-in program effects	/
	10-34		Effect 1
	35-59		Effect 2
	60-84		Effect 3
	85-109		Effect 4
	110-134		Effect 5
	135-159		Effect 6
	160-184		Effect 7
	185-209		Effect 8

	210-234		Effect 9
	235-244		Effect 10
	245-255		Effect 1 ~Effect 10 Loop Play
16CH	0-255	Main LEDs built-in program effects Speed	0-127 INDEX ,128 – stop 129-191 clockwise rotation from fast to slow, 192 stop, 193-255 counterclockwise rotate slow to fast
17CH	0-9	Aura LEDs built-in program effects	/
	10-34		Effect 1
	35-59		Effect 2
	60-84		Effect 3
	85-109		Effect 4
	110-134		Effect 5
	135-159		Effect 6
	160-184		Effect 7
	185-209		Effect 8
	210-234		Effect 9
	235-244		Effect 10
	245-255		Effect 1 ~Effect 10 Loop Play
18CH	0-255	Aura LEDs built-in program effects Speed	0-127 INDEX ,128 – stop 129-191 clockwise rotation from fast to slow, 192 stop, 193-255 counterclockwise rotate slow to fast
19CH	000-015	DMX Mode	Pixel Controlled
	016-238	Mixed Mode	
	239-255	ArtNet Mode	
20CH	0-255	Main Led Red 1	Horizontal row 1, from dark to light
21CH	0-255	Main Led Green 1	
22CH	0-255	Main Led Blue 1	
23CH	0-255	Main Led Lime 1	
24CH	0-255	Main Led Red 2	Horizontal row 2, from dark to light
25CH	0-255	Main Led Green 2	
26CH	0-255	Main Led Blue 2	
27CH	0-255	Main Led Lime 2	
28CH	0-255	Main Led Red 3	Horizontal row 3, from dark to light
29CH	0-255	Main Led Green 3	
30CH	0-255	Main Led Blue 3	
31CH	0-255	Main Led Lime 3	
32CH	0-255	Aura Led Red 1	Horizontal row 1, from dark to light
33CH	0-255	Aura Led Green 1	
34CH	0-255	Aura Led Blue 1	
35CH	0-255	Aura Led Warm White 1	
36CH	0-255	Aura Led Red 2	Horizontal row 2, from dark to light
37CH	0-255	Aura Led Green 2	
38CH	0-255	Aura Led Blue 2	
39CH	0-255	Aura Led Warm White 2	
40CH	0-255	Aura Led Red 3	Horizontal row 3, from dark to light
41CH	0-255	Aura Led Green 3	

42CH	0-255	Aura Led Blue 3	
43CH	0-255	Aura Led Warm White 3	
44CH	0-255	Aura Led Red 4	Horizontal row 4, from dark to light
45CH	0-255	Aura Led Green 4	
46CH	0-255	Aura Led Blue 4	
47CH	0-255	Aura Led Warm White 4	

87CH Mode

Channel	Value	Function	Description
1CH	0-255	Tilt Rotating	0° -210°
2CH	0-255	Tilt Rotating Fine	16 bit adjustable
3CH	0-255	Tilt Motor Speed	Fast to slow
4CH	0-4	/	
	5-9	The display stays on	
	10-14	Display shows 10S	
	15-19	Display shows 30S	
	20-24	Display shows 1min	
	25-29	Screen lock off	
	30-34	Screen lock on	
	35-39	Signal Hold	
	40-44	Black out	
	45-59	/	
	60-64	Standard dimming	
	65-69	Fast dimming	
	70-74	Slow dimming	
	75-84	/	
	85-89	Linear	
	90-94	Square	
	95-99	S-Shape	
	100-109	/	
	110-114	4000Hz	
	115-119	8000Hz	
	120-124	16000Hz	
	125-129	24000Hz	
	130-139	/	
	140-144	Fan Mode Auto	
	145-149	Fan Mode Silent	
	150-154	Fan Mode Full on	
	155-164	/	

	165-169	Red Drift OFF	
	170-174	Red Drift ON	
	175-179	Pixel Invert-Off	
	180-184	Pixel Invert-On	
	185-189	Tilt invert - off	
	190-194	Tilt invert - on	
	195-199	Error Correction - Off	
	200-204	Error Correction - On	
	205-209	Reset All	
	210-255	/	
5CH	0-255	Frosted glass	0%-100% (from clear to frosted, linear increase)
6CH	0-255	Main LEDs Dimmer	Dark to Bright
7CH	0-255	Main LEDs Fine	16 bit Dimmer
8CH	0-255	Aura LEDs Dimmer	Dark to Bright
9CH	0-255	Aura LEDs Fine	16 bit Dimmer
10CH	0-5	Main LEDs Strobe	Strobe Open
	6-10		Strobe Closed
	011-035		Puls Random,slow->fast
	036-060		Ramp up Random,slow->fast
	061-085		Ramp down Random,slow->fast
	086-110		Random Strobe Effect
	111-135		Strobe Break Effect
	136-250		Strobe slow ->fast
	251-255		Strobe Open
11CH	0-5	Aura LEDs Strobe	Strobe Open
	6-10		Strobe Closed
	011-035		Puls Random,slow->fast
	036-060		Ramp up Random,slow->fast
	061-085		Ramp down Random,slow->fast
	086-110		Random Strobe Effect
	111-135		Strobe Break Effect
	136-250		Strobe slow ->fast
	251-255		Strobe Open
12CH	0-5	CTO	/
	6-21		1800K
	22-37		2000K
	38-53		2500K
	54-69		2700K
	70-85		3000K
	86-101		3200K
	102-117		3500K
	118-133		4000K
	134-149		4500K

	150-165		5000K
	166-181		5600K
	182-197		6000K
	198-213		6500K
	214-229		7200K
	230-255		8000K
13CH	000-000	Color temperature compensation	OFF
	001-127		From Magenta to OFF
	128-128		OFF
	129-255		From OFF to Green
14CH	0-45	Color Macros	/
	46-50		R=000,G=255,B=255,L=000
	51-55		R=255,G=255,B=000,L=000
	56-60		R=255,G=000,B=255,L=000
	61-65		R=156,G=126,B=000,L=000
	66-70		R=152,G=115,B=009,L=000
	71-75		R=198,G=114,B=009,L=000
	76-80		R=255,G=056,B=000,L=000
	81-85		R=255,G=135,B=000,L=000
	86-90		R=255,G=100,B=000,L=000
	91-95		R=255,G=065,B=000,L=000
	96-100		R=255,G=083,B=002,L=000
	101-105		R=255,G=112,B=000,L=141
	106-110		R=255,G=087,B=000,L=107
	111-115		R=255,G=107,B=000,L=130
	116-120		R=243,G=117,B=039,L=197
	121-125		R=000,G=255,B=135,L=000
	126-130		R=000,G=194,B=130,L=000
	131-135		R=041,G=219,B=000,L=000
	136-140		R=245,G=202,B=000,L=000
	141-145		R=237,G=163,B=000,L=000
	146-150		R=230,G=160,B=000,L=069
	151-155		R=255,G=166,B=000,L=000
	156-160		R=255,G=122,B=000,L=000
	161-165		R=255,G=141,B=031,L=000
	166-170		R=217,G=130,B=028,L=000
	171-175		R=255,G=109,B=033,L=000
	176-180		R=255,G=020,B=015,L=000
	181-185		R=051,G=255,B=051,L=000
	186-190		R=206,G=255,B=056,L=000
	191-195		R=074,G=255,B=082,L=000
	196-200		R=000,G=186,B=255,L=000
	201-205		R=206,G=255,B=000,L=000
	206-210		R=084,G=255,B=013,L=000
	211-215		R=227,G=041,B=056,L=000
	216-220		R=255,G=058,B=000,L=000

	221-225		R=255,G=197,B=061,L=000
	226-230		R=077,G=255,B=000,L=000
	231-235		R=000,G=255,B=087,L=000
	235-240		R=255,G=143,B=013,L=000
	241-245		R=253,G=171,B=026,L=000
	246-250		R=222,G=084,B=000,L=000
	251-255		R=255,G=046,B=002,L=000
15CH	0-9	Main LEDs built-in program effects	/
	10-34		Effect 1
	35-59		Effect 2
	60-84		Effect 3
	85-109		Effect 4
	110-134		Effect 5
	135-159		Effect 6
	160-184		Effect 7
	185-209		Effect 8
	210-234		Effect 9
	235-244		Effect 10
	245-255		Effect 1 ~Effect 10 Loop Play
16CH	0-255	Main LEDs built-in program effects Speed	0-127 INDEX ,128 – stop 129-191 clockwise rotation from fast to slow, 192 stop, 193-255 counterclockwise rotate slow to fast
17CH	0-9	Aura LEDs built-in program effects	/
	10-34		Effect 1
	35-59		Effect 2
	60-84		Effect 3
	85-109		Effect 4
	110-134		Effect 5
	135-159		Effect 6
	160-184		Effect 7
	185-209		Effect 8
	210-234		Effect 9
	235-244		Effect 10
	245-255		Effect 1 ~Effect 10 Loop Play
18CH	0-255	Aura LEDs built-in program effects Speed	0-127 INDEX ,128 – stop 129-191 clockwise rotation from fast to slow, 192 stop, 193-255 counterclockwise rotate slow to fast
19CH	000-015	DMX Mode	
	016-238	Mixed Mode	
	239-255	ArtNet Mode	
20CH	0-255	Main Led Red 1	Vertical row 1, from dark to light
21CH	0-255	Main Led Green 1	
22CH	0-255	Main Led Blue 1	
23CH	0-255	Main Led Lime 1	
:	:	:	:
:	:	:	:

:	:	:	:
48CH	0-255	Main Led Red 8	Vertical row 8, from dark to light
49CH	0-255	Main Led Green 8	
50CH	0-255	Main Led Blue 8	
51CH	0-255	Main Led Lime 8	
52CH	0-255	Aura Led Red 1	Vertical row 1, from dark to light
53CH	0-255	Aura Led Green 1	
54CH	0-255	Aura Led Blue 1	
55CH	0-255	Aura Led Warm White 1	
:	:	:	:
:	:	:	:
84CH	0-255	Aura Led Red 9	Vertical row 9, from dark to light
85CH	0-255	Aura Led Green 9	
86CH	0-255	Aura Led Blue 9	
87CH	0-255	Aura Led Warm White 9	

255CH Mode

Channel	Value	Function	Description
1CH	0-255	Tilt Rotating	0° -210°
2CH	0-255	Tilt Rotating Fine	16 bit adjustable
3CH	0-255	Tilt Motor Speed	Fast to slow
4CH	0-4	/	
	5-9	The display stays on	
	10-14	Display shows 10S	
	15-19	Display shows 30S	
	20-24	Display shows 1min	
	25-29	Screen lock off	
	30-34	Screen lock on	
	35-39	Signal Hold	
	40-44	Black out	
	45-59	/	
	60-64	Standard dimming	
	65-69	Fast dimming	
	70-74	Slow dimming	
	75-84	/	
	85-89	Linear	
	90-94	Square	
	95-99	S-Shape	
	100-109	/	
	110-114	4000Hz	
	115-119	8000Hz	
	120-124	16000Hz	

	125-129	24000Hz	
	130-139	/	
	140-144	Fan Mode Auto	
	145-149	Fan Mode Silent	
	150-154	Fan Mode Full on	
	155-164	/	
	165-169	Red Drift OFF	
	170-174	Red Drift ON	
	175-179	Pixel Invert-Off	
	180-184	Pixel Invert-On	
	185-189	Tilt invert - off	
	190-194	Tilt invert - on	
	195-199	Error Correction - Off	
	200-204	Error Correction - On	
	205-209	Reset All	
	210-255	/	
5CH	0-255	Frosted glass	0%-100% (from clear to frosted, linear increase)
6CH	0-255	Main LEDs Dimmer	Dark to Bright
7CH	0-255	Main LEDs Dimmer Fine	16 bit Dimmer
8CH	0-255	Aura LEDs Dimmer	Dark to Bright
9CH	0-255	Aura LEDs Dimmer Fine	16 bit Dimmer
10CH	0-5	Main LEDs Strobe	Strobe Open
	6-10		Strobe Closed
	011-035		Puls Random,slow->fast
	036-060		Ramp up Random,slow->fast
	061-085		Ramp down Randon,slow->fast
	086-110		Random Strobe Effect
	111-135		Strobe Break Effect
	136-250		Strobe slow ->fast
	251-255		Strobe Open
11CH	0-5	Aura LEDs Strobe	Strobe Open
	6-10		Strobe Closed
	011-035		Puls Random,slow->fast
	036-060		Ramp up Random,slow->fast
	061-085		Ramp down Randon,slow->fast
	086-110		Random Strobe Effect
	111-135		Strobe Break Effect
	136-250		Strobe slow ->fast
	251-255		Strobe Open
12CH	0-5	CTO	/
	6-21		1800K
	22-37		2000K
	38-53		2500K
	54-69		2700K
	70-85		3000K
	86-101		3200K

	102-117		3500K
	118-133		4000K
	134-149		4500K
	150-165		5000K
	166-181		5600K
	182-197		6000K
	198-213		6500K
	214-229		7200K
	230-255		8000K
13CH	000-000	Color temperature compensation	OFF
	001-127		From Magenta to OFF
	128-128		OFF
	129-255		From OFF to Green
14CH	0-45	Color Macros	/
	46-50		R=000,G=255,B=255,L=000
	51-55		R=255,G=255,B=000,L=000
	56-60		R=255,G=000,B=255,L=000
	61-65		R=156,G=126,B=000,L=000
	66-70		R=152,G=115,B=009,L=000
	71-75		R=198,G=114,B=009,L=000
	76-80		R=255,G=056,B=000,L=000
	81-85		R=255,G=135,B=000,L=000
	86-90		R=255,G=100,B=000,L=000
	91-95		R=255,G=065,B=000,L=000
	96-100		R=255,G=083,B=002,L=000
	101-105		R=255,G=112,B=000,L=141
	106-110		R=255,G=087,B=000,L=107
	111-115		R=255,G=107,B=000,L=130
	116-120		R=243,G=117,B=039,L=197
	121-125		R=000,G=255,B=135,L=000
	126-130		R=000,G=194,B=130,L=000
	131-135		R=041,G=219,B=000,L=000
	136-140		R=245,G=202,B=000,L=000
	141-145		R=237,G=163,B=000,L=000
	146-150		R=230,G=160,B=000,L=069
	151-155		R=255,G=166,B=000,L=000
	156-160		R=255,G=122,B=000,L=000
	161-165		R=255,G=141,B=031,L=000
	166-170		R=217,G=130,B=028,L=000
	171-175		R=255,G=109,B=033,L=000
	176-180		R=255,G=020,B=015,L=000
	181-185		R=051,G=255,B=051,L=000
	186-190		R=206,G=255,B=056,L=000
	191-195		R=074,G=255,B=082,L=000
	196-200		R=000,G=186,B=255,L=000
	201-205		R=206,G=255,B=000,L=000

	206-210		R=084,G=255,B=013,L=000
	211-215		R=227,G=041,B=056,L=000
	216-220		R=255,G=058,B=000,L=000
	221-225		R=255,G=197,B=061,L=000
	226-230		R=077,G=255,B=000,L=000
	231-235		R=000,G=255,B=087,L=000
	235-240		R=255,G=143,B=013,L=000
	241-245		R=253,G=171,B=026,L=000
	246-250		R=222,G=084,B=000,L=000
	251-255		R=255,G=046,B=002,L=000
15CH	000-015	DMX Mode	Pixel Controlled
	016-238	Mixed Mode	
	239-255	ArtNet Mode	
16CH	0-255	Main Led Red 1	Pixel controlled, from dark to bright (the first LEDs)
17CH	0-255	Main Led Green 1	
18CH	0-255	Main Led Blue 1	
19CH	0-255	Main Led Lime 1	
:	:	:	:
:	:	:	:
108CH	0-255	Main Led Red 24	Pixel controlled, from dark to bright (the 24th LEDs)
109CH	0-255	Main Led Green 24	
110CH	0-255	Main Led Blue 24	
111CH	0-255	Main Led Lime 24	
112CH	0-255	Aura Led Red 1	Pixel controlled, from dark to bright (the first LEDs)
113CH	0-255	Aura Led Green 1	
114CH	0-255	Aura Led Blue 1	
115CH	0-255	Aura Led Warm White 1	
:	:	:	:
:	:	:	:
252CH	0-255	Aura Led Red 36	Pixel controlled, from dark to bright (the 36th LEDs)
253CH	0-255	Aura Led Green 36	
254CH	0-255	Aura Led Blue 36	
255CH	0-255	Aura Led Warm White 36	

DIMENSIONAL DRAWINGS

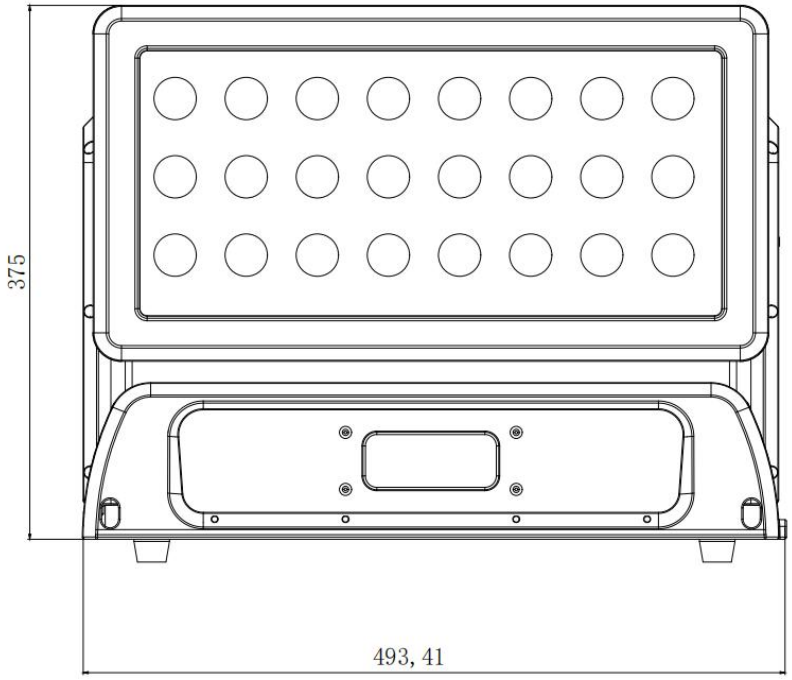

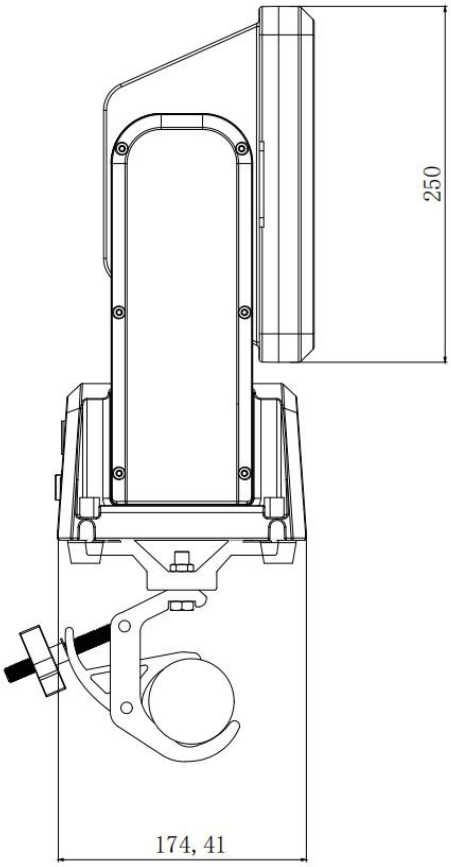

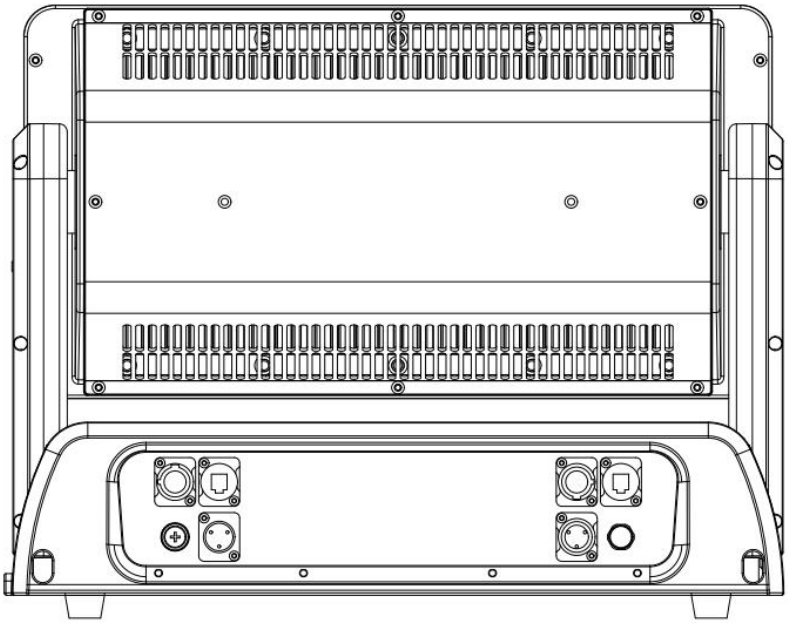

SPECIFICATIONS

LIGHT SOURCE
LED Source: 24*25W RGBL LEDs + 36*1.2W RGBWW Aura LEDs(4 LEDs as one pixel)
Lens Angle:6°

◆Movement
Position Feedback: yes
Tilt (Degrees): 180°

◆Control
Channel Mode:15/27/47/87/255CH
Display:Full Color 180° Reversible LCD Menu Display
Protocol: DMX, RDM, ArtNet, sACN
Cooling: Temperature controlled, Overheating protection

◆Effects
Dimmer: 0-100% electronic 16 - bit Dimming
Internal Effects: Preset CTO / LED Macro Effects
Electronic Frost

◆Connectors
Signal connection: Seetronic IP65 XLR 5-Pin or 3-Pin
In/Out
Power Input: Seetronic powerCON TRUE1 In/Out

◆Operating Condition
Mains: 100-240V AC / 50-60Hz
Consumption: 800W
Ambient: -30°C ~ 45°C

◆Physical
Dimensions: 493 x 175 x 375mm
Weight: 19.5kg
Cooling Noiseless fan for forced air

◆IP Rated
IP65