STROBO4864IP

Professional Motorized Matrix Strobe IP65

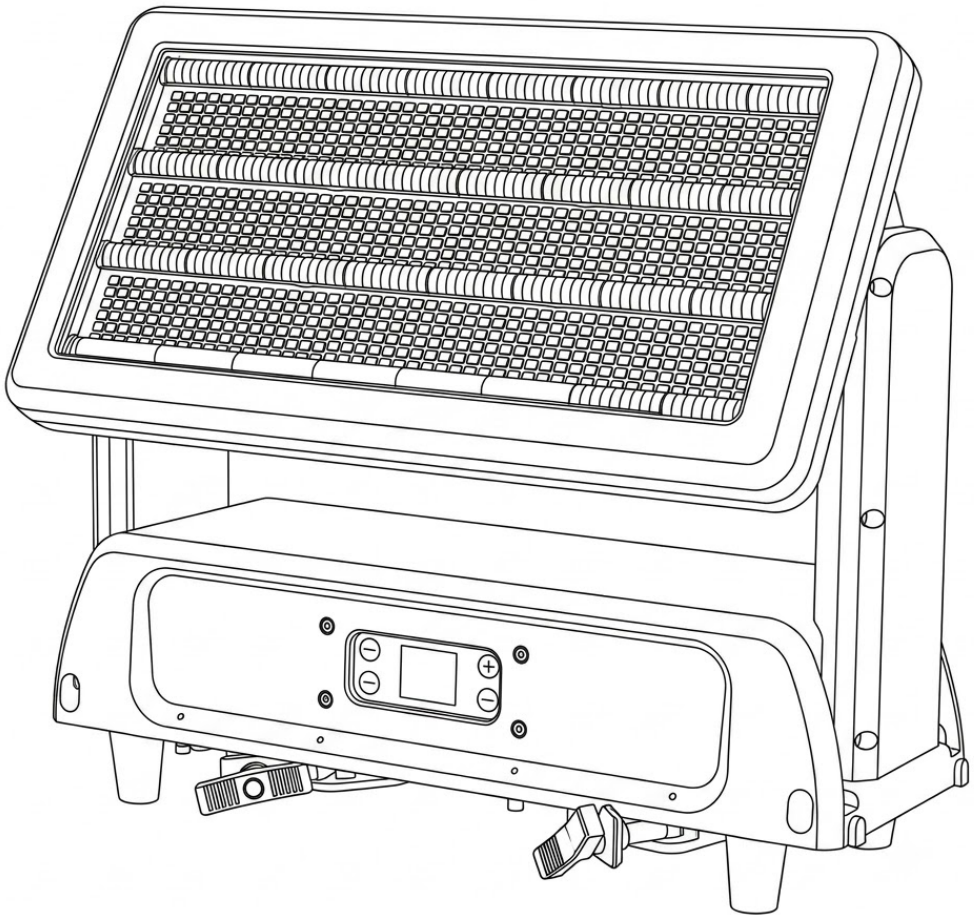

USER MANUAL

- Be sure to read the USER MANUAL carefully before using this product.
- Be sure to keep the USER MANUAL properly for future needs.
- Use this product correctly when you can fully understand the User Manual

SAFETY PRECAUTIONS

This fixture is a sophisticated piece of electronic equipment.To guarantee a smooth operation,it is important to follow all instructions and guidelines in this manual. Professional is not responsible for injuries and/or damages resulting from the misuse of this fixture due to the disregard of the information printed in this manual.Only qualified and/or certified personnel should perform installation of this fixture and only the original rigging parts included with this fixture should be used for installation.Any modifications to the fixture and/ or the included mounting hardware will void the original manufacturer's warranty and increase the risk of damage and/or personal injury.

PROTECTION CLASS 1 - FIXTURE MUST BE PROPERLY GROUNDED.

THERE ARE NO USER SERVICEABLE PARTS INSIDE THIS UNIT. DO NOT ATTEMPT ANY REPAIRS YOURSELF, AS DOING SO WILL VOID YOUR MANUFACTURER' S WARRANTY. DAMAGES RESULTING FROM MODIFICATIONS TO THIS FIXTURE AND/ OR THE DISREGARD OF SAFETY INSTRUCTIONS AND GUIDELINES IN THIS MANUAL VOID THE MANUFACTURER' S WARRANTY AND ARE NOT SUBJECT TO ANY WARRANTY CLAIMS AND/ OR REPAIRS.

DO NOT PLUG FIXTURE INTO A DIMMER PACK!
NEVER OPEN THIS FIXTURE WHILE IN USE!
UNPLUG POWER BEFORE SERVICING FIXTURE!
NEVER TOUCH FIXTURE DURING OPERATION, AS IT MAY BE HOT! KEEP FLAMMABLE MATERIALS AWAY FROM FIXTURE!

NEVER LOOK DIRECTLY INTO THE LIGHT SOURCE!
RETINA INJURY RISK - MAY INDUCE BLINDNESS!
SENSITIVE PERSONS MAY SUFFER AN EPILEPTIC SHOCK!

ENSURE ALL CONNECTIONS AND END CAPS ARE PROPERLY SEALED WITH A DIELECTRIC GREASE (AVAILABLE AT MOST ELECTRICAL SUPPLIERS) TO PREVENT WATER CORROSION AND/ OR ELECTRICAL SHORT CIRCUIT.

MINIMUM DISTANCE TO OBJECTS/SURFACES
MUST BE 3.3 FEET (1 METER)
MAXIMUM TEMP OF EXTERNAL SURFACE 185° F (85° C)
MINIMUM DISTANCE OF FLAMMABLE MATERIALS FROM THE SURFACE IS 1.6 FEET (0 .5 METER)

SAFETY PRECAUTIONS

- DO NOT TOUCH the fixture housing during operation.Turn OFF the power and allow approximately 15 minutes for the fixture to cool down before servicing.
- DO NOT shake fixture, and avoid brute force when installing and/or operating fixture.
- DO NOT operate fixture if the power cord is frayed, crimped, damaged and/or if any of the power cord connectors are damaged and do not insert into the fixture securely with ease.
- NEVER force a power cord connector into the fixture.If the power cord or any of its connectors are damaged, replace it immediately with a new one of the same power rating.
- DO NOT block any air ventilation slots.
- All fan and air inlets must remain clean and never blocked.
- Allow approx.6” (15cm) between fixture and other devices or a wall for proper cooling.
- Always disconnect fixture from main power source before performing any type of service and/or cleaning procedure.
- Only handle the power cord by the plug end.Never pull out the plug by tugging the wire portion of the cord.
- During the initial operation of this fixture, a light smoke or smell may emit from the interior of the fixture. This is a normal process and is caused by excess paint in the interior of the casing burning off from the heat associated with the lamp and will decrease gradually over time.
- Consistent operational breaks will ensure fixture will function properly for many years .
- ONLY use the original packaging and materials to transport the fixture in for service.

MAINTENANCE GUIDELINES

DISCONNECT POWER BEFORE PERFORMING ANY MAINTENANCE!

CLEANING

Frequent cleaning is recommended to ensure proper function,optimized light output, and an extended life.The frequency of cleaning depends on the environment in which the fixture operates: damp,smoky or particularly dirty environments can cause greater accumulation of dirt on the fixture's optics.Periodically clean the external lens surface with a soft cloth to avoid dirt/debris accumulation.**NEVER** use alcohol, solvents, or ammonia-based cleaners .

MAINTENANCE

Regular inspections are recommended to ensure proper function and extended life.There are no user serviceable parts inside this fixture.Please refer all other service issues to an authorized our service technician.Should you need any spare parts, please order genuine parts from your local dealer.

Please refer to the following points during routine inspections:

- A detailed electric check by an approved electrical engineer every three months, to make sure the circuit contacts are in good condition and prevent overheating.

- Be sure all screws and fasteners are securely tightened at all times.Loose screws may fall out during normal operation, resulting in damage or injury as larger parts could fall.

- Check for any deformations on the housing, color lenses, rigging hardware,and rigging points (ceiling,suspension, trussing).Deformations in the housing could allow for dust to enter into the fixture.Damaged rigging points or unsecured rigging could cause the fixture to fall and seriously injure a person(s).

- Electric power supply cables must not show any damage,material fatigue or sediments.NEVER remove the ground prong from the power cable.

INSTALLATION GUIDELINES

FLAMMABLE MATERIAL WARNING

Keep fixture minimum 5.0 feet (1 .5m) away from flammable materials and/or pyrotechnics.

ELECTRICAL CONNECTIONS

A qualified electrician should be used for all electrical connections and/or installations.

MINIMUM DISTANCE TO SURFACES/OBJECTS IS 3.3 FEET (1 METER).

MINIMUM DISTANCE TO FLAMMABLE MATERIALS IS 1.6 FEET(0 .5 METER).

EXTERNAL SURFACE CAN REACH TEMPERATURES OF 185° F (85° C).

DO NOT INSTALL THE FIXTURE IF YOU ARE NOT QUALIFIED TO DO SO!

Fixture **MUST** be installed following all local,national, and country commercial electrical and construction codes and regulations.

Before rigging/mounting a single fixture or multiple fixtures to any metal truss/structure or placing the fixture(s) on any surface,a professional equipment installer **MUST** be consulted to determine if the metal truss/ structure or surface is properly certified to safely hold the combined weight of the fixture(s) , clamps, cables, and accessories.

Overhead rigging requires extensive experience,including calculating working load limits, installation material being used, and periodic safety inspection of all installation material and the fixture, among other skills. If you lack these qualifications, do not attempt the installation yourself. Improper installation can result in bodily injury.

Fixture ambient operating temperature range is -4° to 113°F (-20° to 45°C). Do not operate the fixture when the ambient temperature falls outside of this range.

Fixture(s) should be installed away from walking paths, seating areas, or areas were unauthorized personnel might reach the fixture by hand.

NEVER stand directly below the fixture(s) when rigging, removing, or servicing.

Overhead fixture installation must always be secured with a secondary safety attachment, such as an appropriately rated safety cable.

Allow approximately 15 minutes for the fixture to cool down before serving.

SYSTEM MENU

Main Menu	Sub Menu	Option/Value	Option/Value
Address	001		
	...		
	512		
Channel Mode	18 CH		
	33CH		
	56CH		
	76CH		
	112CH		
	114CH		
	138CH		
	208CH		
	92CH		
Setting	Control Mode	DMX	
		Artnet	
		sACN	
	Dimmer Mode	Linear	
		Square	
		I-Square	
		S-Shape	
	Dimmer Speed	Smooth	
		Fast	
	LED Frequency	400HZ	1200HZ
		2000HZ	4000HZ
		6000HZ	8000HZ
		16000HZ	20000HZ
	FAN Mode	Auto	
		Silent	
		Full	
	Screen Reverse	NO	
		YES	
	LED Remap	NO	
		YES	
	Screen Lock	NO	
		YES	
	Factory settings	YES	
		NO	
	Reset	Reset Scan	
Network	Internet	IP Subnet Mask	002.000.000.001
		MS	255.000.000.000
	Universe	Net(0~127)	000~127
		Sub_Universe	000~000
Manual	Normal		
	Sequence	SHOW01	
		SHOW02	
		SHOW03	
		SHOW04	
		SHOW05	
		SHOW06	
		SHOW07	
		SHOW08	
		SHOW09	

		SHOW10	
		SHOW11	
		SHOW12	
		SHOW13	
		SHOW14	
		SHOW15	
		SHOW16	
		SHOW17	
		SHOW18	
	Static	Fixed Color	R
			G
			B
			WW
			CW
			GB
			RB
			RG
			RGB
			RWW
			BWW
			GWW
			RGWW
			RBWW
			GBWW
			RGBWW
			RGBWWCW
		Manual Color	R
			G
			B
			WW
			CW
		Motor	Tilt
Motor	Calibration	Motor Y Calibration	-128-+127

LIGHTING CONSOLE PATCHING GUIDELINES

18CH MODE

33CH MODE

56CH MODE

W1
RGB+WW 1
W2
RGB+WW 2
W3
RGB+WW 3
W4

76CH MODE

W1	W2	W3	W4	W5	W6
RGB 1	RGB 2		RGB 3	RGB 4	
W1	W2	W3	W4	W5	W6
RGB 5	RGB 6		RGB 7	RGB 8	
W7	W8	W9	W10	W11	W12
RGB 9	RGB 10		RGB 11	RGB 12	
W7	W8	W9	W10	W11	W12

112CH MODE

W1							
RGB+WW 1	RGB+WW 2	RGB+WW 3	RGB+WW 4	RGB+WW 5	RGB+WW 6	RGB+WW 7	RGB+WW 8
W2							
RGB+WW 9	RGB+WW 10	RGB+WW 11	RGB+WW 12	RGB+WW 13	RGB+WW 14	RGB+WW 15	RGB+WW 16
W3							
RGB+WW 17	RGB+WW 18	RGB+WW 19	RGB+WW 20	RGB+WW 21	RGB+WW 22	RGB+WW 23	RGB+WW 24
W4							

114CH MODE

W 1	W 2	W 3	W 4	W 5	W 6	W 7	W 8	W 9	W 10	W 11	W 12	W 13	W 14	W 15	W 16	W 17	W 18	W 19	W 20	W 21	W 22	W 23	W 24
RGB+WW 1																							
W 25	W 26	W 27	W 28	W 29	W 30	W 31	W 32	W 33	W 34	W 35	W 36	W 37	W 38	W 39	W 40	W 41	W 42	W 43	W 44	W 45	W 46	W 47	W 48
RGB+WW 1																							
W 49	W 50	W 51	W 52	W 53	W 54	W 55	W 56	W 57	W 58	W 59	W 60	W 61	W 62	W 63	W 64	W 65	W 66	W 67	W 68	W 69	W 70	W 71	W 72
RGB+WW 1																							
W 73	W 74	W 75	W 76	W 77	W 78	W 79	W 80	W 81	W 82	W 83	W 84	W 85	W 86	W 87	W 88	W 89	W 90	W 91	W 92	W 93	W 94	W 95	W 96

138CH MODE

W1	W2	W3	W4	W5	W6	W7	W8
RGB+WW 1	RGB+WW 2	RGB+WW 3	RGB+WW 4	RGB+WW 5	RGB+WW 6	RGB+WW 7	RGB+WW 8
W9	W10	W11	W12	W13	W14	W15	W16
RGB+WW 9	RGB+WW 10	RGB+WW 11	RGB+WW 12	RGB+WW 13	RGB+WW 14	RGB+WW 15	RGB+WW 16
W17	W18	W19	W20	W21	W22	W23	W24
RGB+WW 17	RGB+WW 18	RGB+WW 19	RGB+WW 20	RGB+WW 21	RGB+WW 22	RGB+WW 23	RGB+WW 24
W25	W26	W27	W28	W29	W30	W31	W32

208CH MODE

W 1	W 2	W 3	W 4	W 5	W 6	W 7	W 8	W 9	W 10	W 11	W 12	W 13	W 14	W 15	W 16	W 17	W 18	W 19	W 20	W 21	W 22	W 23	W 24
RGB+WW 1			RGB+WW 2			RGB+WW 3			RGB+WW 4			RGB+WW 5			RGB+WW 6			RGB+WW 7			RGB+WW 8		
W 25	W 26	W 27	W 28	W 29	W 30	W 31	W 32	W 33	W 34	W 35	W 36	W 37	W 38	W 39	W 40	W 41	W 42	W 43	W 44	W 45	W 46	W 47	W 48
RGB+WW 9			RGB+WW 10			RGB+WW 11			RGB+WW 12			RGB+WW 13			RGB+WW 14			RGB+WW 15			RGB+WW 16		
W 49	W 50	W 51	W 52	W 53	W 54	W 55	W 56	W 57	W 58	W 59	W 60	W 61	W 62	W 63	W 64	W 65	W 66	W 67	W 68	W 69	W 70	W 71	W 72
RGB+WW 17			RGB+WW 18			RGB+WW 19			RGB+WW 20			RGB+WW 21			RGB+WW 22			RGB+WW 23			RGB+WW 24		
W 73	W 74	W 75	W 76	W 77	W 78	W 79	W 80	W 81	W 82	W 83	W 84	W 85	W 86	W 87	W 88	W 89	W 90	W 91	W 92	W 93	W 94	W 95	W 96

92CH MODE

W1	W2	W3	W4	W5	W6	W7	W8
RGB+WW 1	RGB+WW 2	RGB+WW 3	RGB+WW 4	RGB+WW 5	RGB+WW 6	RGB+WW 7	RGB+WW 8
W1	W2	W3	W4	W5	W6	W7	W8
Master RGB+WW							
W1	W2	W3	W4	W5	W6	W7	W8
RGB+WW 9	RGB+WW 10	RGB+WW 11	RGB+WW 12	RGB+WW 13	RGB+WW 14	RGB+WW 15	RGB+WW 16
W1	W2	W3	W4	W5	W6	W7	W8

DMX CHART

18CH Mode

Channel	Parameter	Value	Function
1	Tilt	0 - 255	
2	Tilt Fine	0 - 255	
3	Tilt Speed	0 - 255	
4	Control (5s Activation Delay)	0 - 5	No Function
		6 - 9	Default Dimmner (Linear)
		10 - 14	Square Law Dimmer
		15 - 19	Square Inverse Dimmer
		20 - 24	S-Curve Law Dimmer
		25 - 29	Dimmer Speed Fast
		30 - 34	Dimmer Speed Smmoth
		35 - 39	LED Frequency 400Hz
		40 - 44	LED Frequency 1200Hz
		45 - 49	LED Frequency 2000Hz
		50 - 54	LED Frequency 4000Hz
		55 - 59	LED Frequency 6000Hz
		60 - 64	LED Frequency 8000Hz
		65 - 69	LED Frequency 16000Hz
		70 - 74	LED Frequency 20000Hz
		75 - 79	Fan Mode - Auto
		80 - 84	Fan Mode - Quiet
		85 - 89	Fan Mode - Performance
		90 - 94	LED Remap No
		95 - 99	LED Remap Yse
		100 - 199	No Function
		200 - 220	Reset Tilt
		221 - 255	Reset All
5	Master Dimmer	0 - 255	
6	Master Dimmer Fine (16-Bit)	0 - 255	
7	Plate Shutter / Strobe	0 - 5	Open (Default)
		6 - 55	Synchronus Strobe Rate (Slow-to-Fast)
		56 - 125	Pulse Strobe (Slow-to-Fast)
		126 - 189	Random Strobe (Slow-to-Fast)
		190 - 255	Open

8	Beam Shutter / Strobe	0 - 5	Open (Default)
		6 - 55	Synchronus Strobe Rate (Slow-to-Fast)
		56 - 125	Pulse Strobe (Slow-to-Fast)
		126 - 189	Random Strobe (Slow-to-Fast)
		190 - 255	Open
9	Red	0 - 255	
10	Green	0 - 255	
11	Blue	0 - 255	
12	Warm White	0 - 255	
13	Beam W1	0 - 255	
14	Plate Macro FX	0 - 5	No Effect
		6 - 20	Macro Effect 1
		21 - 35	Macro Effect 2
		36 - 50	Macro Effect 3
		51 - 65	Macro Effect 4
		66 - 80	Macro Effect 5
		81 - 95	Macro Effect 6
		96 - 110	Macro Effect 7
		111 - 125	Macro Effect 8
		126 - 140	Macro Effect 9
		141 - 155	Macro Effect 10
		156 - 170	Macro Effect 11
		171 - 185	Macro Effect 12
		186 - 200	Macro Effect 13
		201 - 215	Macro Effect 14
		216 - 230	Macro Effect 15
		231 - 246	Macro Effect 16
		246 - 255	Macro Effect Scroll (Programs 1-16)
15	Plate Macro FX Speed	0 - 255	Slow to Fast
16	Beam Macro FX	0 - 5	No Effect
		6 - 20	Macro Effect 1
		21 - 35	Macro Effect 2
		36 - 50	Macro Effect 3
		51 - 65	Macro Effect 4
		66 - 80	Macro Effect 5
		81 - 95	Macro Effect 6
		96 - 110	Macro Effect 7
		111 - 125	Macro Effect 8
		126 - 140	Macro Effect 9
		141 - 155	Macro Effect 10
		156 - 170	Macro Effect 11
		171 - 185	Macro Effect 12
		186 - 200	Macro Effect 13
		201 - 215	Macro Effect 14
		216 - 230	Macro Effect 15
		231 - 246	Macro Effect 16
		246 - 255	Macro Effect Scroll (Programs 1-16)
17	Beam Macro FX Speed	0 - 255	Slow to Fast
18	Plate Color Temperature Macro	0 - 17	Disabled
		18 - 34	8000K
		35 - 51	7500K
		52 - 68	6500K
		69 - 85	6000K
		86 - 102	5600K
		103 - 119	5000K

		120 - 136	4500K
		137 - 153	4000K
		154 - 170	3500K
		171 - 187	3200K
		188 - 204	3000K
		205 - 221	2700K
		222 - 230	2500K
		239 - 255	2000K (Tungsten Effect)

33CH Mode

Channel	Parameter	Value	Function
1	Tilt	0 - 255	
2	Tilt Fine	0 - 255	
3	Tilt Speed	0 - 255	
4	Control (5s Activation Delay)	0 - 5	No Function
		6 - 9	Default Dimmner (Linear)
		10 - 14	Square Law Dimmer
		15 - 19	Square Inverse Dimmer
		20 - 24	S-Curve Law Dimmer
		25 - 29	Dimmer Speed Fast
		30 - 34	Dimmer Speed Smmoth
		35 - 39	LED Frequency 400Hz
		40 - 44	LED Frequency 1200Hz
		45 - 49	LED Frequency 2000Hz
		50 - 54	LED Frequency 4000Hz
		55 - 59	LED Frequency 6000Hz
		60 - 64	LED Frequency 8000Hz
		65 - 69	LED Frequency 16000Hz
		70 - 74	LED Frequency 20000Hz
		75 - 79	Fan Mode - Auto
		80 - 84	Fan Mode - Quiet
		85 - 89	Fan Mode - Performance
		90 - 94	LED Remap No
		95 - 99	LED Remap Yse
		100 - 199	No Function
		200 - 220	Reset Tilt
		221 - 255	Reset All
5	Master Dimmer	0 - 255	
6	Master Dimmer Fine (16-Bit)	0 - 255	
7	Plate Shutter / Strobe	0 - 5	Open (Default)
		6 - 55	Synchronus Strobe Rate (Slow-to-Fast)
		56 - 125	Pulse Strobe (Slow-to-Fast)

		126 - 189	Random Strobe (Slow-to-Fast)
		190 - 255	Open
8	Plate Flash Duration	0 - 5	Disabled
		6 - 245	7 - 650ms
		246 - 255	Disabled
9	Beam Shutter / Strobe	0 - 5	Open (Default)
		6 - 55	Synchronus Strobe Rate (Slow-to-Fast)
		56 - 125	Pulse Strobe (Slow-to-Fast)
		126 - 189	Random Strobe (Slow-to-Fast)
		190 - 255	Open
10	Beam Flash Duration	0 - 5	Disabled
		6 - 245	7 - 650ms
		246 - 255	Disabled
11	Red 1	0 - 255	
12	Green 1	0 - 255	
13	Blue 1	0 - 255	
14	Warm White 1	0 - 255	
15	Red 2	0 - 255	
16	Green 2	0 - 255	
17	Blue 2	0 - 255	
18	Warm White 2	0 - 255	
19	Red 3	0 - 255	
20	Green 3	0 - 255	
21	Blue 3	0 - 255	
22	Warm White 3	0 - 255	
23	Beam W1	0 - 255	
24	Beam W2	0 - 255	
25	Beam W3	0 - 255	
26	Beam W4	0 - 255	
27	Plate Macro FX	0 - 5	No Effect
		6 - 20	Macro Effect 1
		21 - 35	Macro Effect 2
		36 - 50	Macro Effect 3
		51 - 65	Macro Effect 4
		66 - 80	Macro Effect 5
		81 - 95	Macro Effect 6
		96 - 110	Macro Effect 7
		111 - 125	Macro Effect 8
		126 - 140	Macro Effect 9
		141 - 155	Macro Effect 10
		156 - 170	Macro Effect 11
		171 - 185	Macro Effect 12
		186 - 200	Macro Effect 13
		201 - 215	Macro Effect 14
		216 - 230	Macro Effect 15
		231 - 246	Macro Effect 16
		246 - 255	Macro Effect Scroll (Programs 1-16)
28	Plate Macro FX Speed	0 - 255	Slow to Fast
29	Beam Macro FX	0 - 5	No Effect
		6 - 20	Macro Effect 1
		21 - 35	Macro Effect 2
		36 - 50	Macro Effect 3

		51 - 65	Macro Effect 4
		66 - 80	Macro Effect 5
		81 - 95	Macro Effect 6
		96 - 110	Macro Effect 7
		111 - 125	Macro Effect 8
		126 - 140	Macro Effect 9
		141 - 155	Macro Effect 10
		156 - 170	Macro Effect 11
		171 - 185	Macro Effect 12
		186 - 200	Macro Effect 13
		201 - 215	Macro Effect 14
		216 - 230	Macro Effect 15
		231 - 246	Macro Effect 16
		246 - 255	Macro Effect Scroll (Programs 1-16)
30	Beam Macro FX Speed	0 - 255	Slow to Fast
31	Color Temperature Control	0 - 17	Disabled
		18 - 34	8000K
		35 - 51	7500K
		52 - 68	6500K
		69 - 85	6000K
		86 - 102	5600K
		103 - 119	5000K
		120 - 136	4500K
		137 - 153	4000K
		154 - 170	3500K
		171 - 187	3200K
		188 - 204	3000K
		205 - 221	2700K
		222 - 230	2500K
		239 - 255	2000K (Tungsten Effect)
32	All Plate Foreground Color Macro	0 - 17	Disabled, No Effect
		18 - 34	Red
		35 - 51	Green
		52 - 68	Blue
		69 - 85	Cyan
		86 - 102	Magenta
		103 - 119	Yellow
		120 - 136	Lime
		137 - 153	Congo Blue
		154 - 170	Medium Pink
		171 - 187	Lavender
		188 - 204	Fire
		205 - 221	Orange
		222 - 230	Amber
		239 - 255	UV
33	Plate Foreground Color Macro	0 - 17	Disabled, No Effect
		18 - 34	Red
		35 - 51	Green
		52 - 68	Blue
		69 - 85	Cyan
		86 - 102	Magenta
		103 - 119	Yellow

		120 - 136	Lime
		137 - 153	Congo Blue
		154 - 170	Medium Pink
		171 - 187	Lavender
		188 - 204	Fire
		205 - 221	Orange
		222 - 230	Amber
		239 - 255	UV

56CH Mode

Channel	Parameter	Value	Function
1	Tilt	0 - 255	
2	Tilt Fine	0 - 255	
3	Tilt Speed	0 - 255	
4	Control (5s Activation Delay)	0 - 5	No Function
		6 - 9	Default Dimmner (Linear+D14:D29)
		10 - 14	Square Law Dimmer
		15 - 19	Square Inverse Dimmer
		20 - 24	S-Curve Law Dimmer
		25 - 29	Dimmer Speed Fast
		30 - 34	Dimmer Speed Smmoth
		35 - 39	LED Frequency 400Hz
		40 - 44	LED Frequency 1200Hz
		45 - 49	LED Frequency 2000Hz
		50 - 54	LED Frequency 4000Hz
		55 - 59	LED Frequency 6000Hz
		60 - 64	LED Frequency 8000Hz
		65 - 69	LED Frequency 16000Hz
		70 - 74	LED Frequency 20000Hz
		75 - 79	Fan Mode - Auto
		80 - 84	Fan Mode - Quiet
		85 - 89	Fan Mode - Performance
		90 - 94	LED Remap No
		95 - 99	LED Remap Yse
		100 -199	No Function
		200 -220	Reset Tilt
		221 -255	Reset All
5	Master Dimmer	0 - 255	
6	Master Dimmer Fine (16-Bit)	0 - 255	

7	Plate 1	Shutter / Strobe	0 - 5	Open (Default)
			6 - 55	Synchronus Strobe Rate (Slow-to-Fast)
			56 - 125	Pulse Strobe (Slow-to-Fast)
			126 - 189	Random Strobe (Slow-to-Fast)
			190 - 255	Open
8		Flash Duration	0 - 5	Open (Default)
			6 - 245	7 - 650ms
			246 - 255	Disabled
9	Plate 2	Shutter / Strobe	0 - 5	Open (Default)
			6 - 55	Synchronus Strobe Rate (Slow-to-Fast)
			56 - 125	Pulse Strobe (Slow-to-Fast)
			126 - 189	Random Strobe (Slow-to-Fast)
			190 - 255	Open
10		Flash Duration	0 - 5	Open (Default)
			6 - 245	7 - 650ms
			246 - 255	Disabled
11	Plate 3	Shutter / Strobe	0 - 5	Open (Default)
			6 - 55	Synchronus Strobe Rate (Slow-to-Fast)
			56 - 125	Pulse Strobe (Slow-to-Fast)
			126 -189	Random Strobe (Slow-to-Fast)
			190 -255	Open
12		Flash Duration	0 - 5	Open (Default)
			6 - 245	7 - 650ms
			246 -255	Disabled
13	Beam W1	Shutter / Strobe	0 - 5	Open (Default)
			6 - 55	Synchronus Strobe Rate (Slow-to-Fast)
			56 - 125	Pulse Strobe (Slow-to-Fast)
			126 -189	Random Strobe (Slow-to-Fast)
			190 -255	Open
14		Flash Duration	0 - 5	Open (Default)
			6 - 245	7 - 650ms
			246 -255	Disabled
15	Beam W2	Shutter / Strobe	0 - 5	Open (Default)
			6 - 55	Synchronus Strobe Rate (Slow-to-Fast)
			56 - 125	Pulse Strobe (Slow-to-Fast)
			126 -189	Random Strobe (Slow-to-Fast)
			190 -255	Open
16		Flash Duration	0 - 5	Open (Default)
			6 - 245	7 - 650ms
			246 -255	Disabled
17	Beam W3	Shutter / Strobe	0 - 5	Open (Default)
			6 - 55	Synchronus Strobe Rate (Slow-to-Fast)
			56 - 125	Pulse Strobe (Slow-to-Fast)
			126 -189	Random Strobe (Slow-to-Fast)
			190 -255	Open
18		Flash Duration	0 - 5	Open (Default)
			6 - 245	7 - 650ms
			246 -255	Disabled
19	Beam	Shutter / Strobe	0 - 5	Open (Default)

	W4		6 - 55	Synchronus Strobe Rate (Slow-to-Fast)
			56 - 125	Pulse Strobe (Slow-to-Fast)
			126 -189	Random Strobe (Slow-to-Fast)
			190 -255	Open
20		Flash Duration	0 - 5	Open (Default)
			6 - 245	7 - 650ms
			246 -255	Disabled
21	Plate 1	Red	0 - 255	
22		Green	0 - 255	
23		Blue	0 - 255	
24		Warm White	0 - 255	
25	Plate 2	Red	0 - 255	
26		Green	0 - 255	
27		Blue	0 - 255	
28		Warm White	0 - 255	
29	Plate 3	Red	0 - 255	
30		Green	0 - 255	
31		Blue	0 - 255	
32		Warm White	0 - 255	
33	W1 Beam	Intensity	0 - 255	
34	W2 Beam	Intensity	0 - 255	
35	W3 Beam	Intensity	0 - 255	
36	W4 Beam	Intensity	0 - 255	
37	Plate 1	Macro FX	0 - 5	Disabled
			6 - 255	See Plate Patterns
38		Macro FX Speed	0 - 255	Slow to Fast
39	Plate 2	Macro FX	0 - 5	Disabled
			6 - 255	See Plate Patterns
40		Macro FX Speed	0 - 255	Slow to Fast
41	Plate 3	Macro FX	0 - 5	Disabled
			6 - 255	See Plate Patterns
42		Macro FX Speed	0 - 255	Slow to Fast
43	Beam W1	Macro FX	0 - 5	Disabled
			6 - 255	See Beam Patterns
44		Macro FX Speed	0 - 255	Slow to Fast
45	Beam W2	Macro FX	0 - 5	Disabled
			6 - 255	See Beam Patterns
46		Macro FX Speed	0 - 255	Slow to Fast
47	Beam W3	Macro FX	0 - 5	Disabled
			6 - 255	See Beam Patterns
48		Macro FX Speed	0 - 255	Slow to Fast
49	Beam W4	Macro FX	0 - 5	Disabled
			6 - 255	See Beam Patterns
50		Macro FX Speed	0 - 255	Slow to Fast
51	Plate 1	Foreground Color Macro	0 - 5	Disabled
			6 - 255	See Color Macros
52		Background Color Macro	0 - 5	Disabled
			6 - 255	See Color Macros
53	Plate 2	Foreground Color Macro	0 - 5	Disabled
			6 - 255	See Color Macros
54		Background Color	0 - 5	Disabled

		Macro	6 - 255	See Color Macros
55	Plate 3	Foreground Color Macro	0 - 5	Disabled
			6 - 255	See Color Macros
56		Background Color Macro	0 - 5	Disabled
			6 - 255	See Color Macros

76CH Mode

Channel	Parameter	Value	Function
1	Tilt	0 - 255	
2	Tilt Fine	0 - 255	
3	Tilt Speed	0 - 255	
4	Control (5s Activation Delay)	0 - 5	No Function
		6 - 9	Default Dimmner (Linear)
		10 - 14	Square Law Dimmer
		15 - 19	Square Inverse Dimmer
		20 - 24	S-Curve Law Dimmer
		25 - 29	Dimmer Speed Fast
		30 - 34	Dimmer Speed Smmoth
		35 - 39	LED Frequency 400Hz
		40 - 44	LED Frequency 1200Hz
		45 - 49	LED Frequency 2000Hz
		50 - 54	LED Frequency 4000Hz
		55 - 59	LED Frequency 6000Hz
		60 - 64	LED Frequency 8000Hz
		65 - 69	LED Frequency 16000Hz
		70 - 74	LED Frequency 20000Hz
		75 - 79	Fan Mode - Auto
		80 - 84	Fan Mode - Quiet
		85 - 89	Fan Mode - Performance
		90 - 94	LED Remap No
		95 - 99	LED Remap Yse
		100 -199	No Function
		200 - 220	Reset Tilt
		221 - 255	Reset All
5	Master Dimmer	0 - 255	
6	Master Dimmer Fine (16-Bit)	0 - 255	
7	Plate Shutter / Strobe	0 - 5	Open (Default)
		6 - 55	Synchronus Strobe Rate (Slow-to-Fast)
		56 - 125	Pulse Strobe (Slow-to-Fast)
		126 - 189	Random Strobe (Slow-to-Fast)
		190 - 255	Open
8	Plate Flash Duration	0 - 5	Disabled
		6 - 245	7 - 650ms
		246 - 255	Disabled
9	Beam Shutter / Strobe	0 - 5	Open (Default)
		6 - 55	Synchronus Strobe Rate (Slow-to-Fast)
		56 - 125	Pulse Strobe (Slow-to-Fast)

			126 - 189	Random Strobe (Slow-to-Fast)
			190 - 255	Open
10	Beam Flash Duration		0 - 5	Disabled
			6 - 245	7 - 650ms
			246 - 255	Disabled
11	All Beam Macro FX (overrides pixel values)		0 - 5	Disabled
			6 - 255	See Beam Patterns
12	All Beam Macro FX Speed		0 - 255	Slow to Fast
13	All Plate Macro FX (overrides pixel values)		0 - 5	Disabled
			6 - 255	See Plate Patterns
14	All Plate Macro FX Speed		0 - 255	Slow to Fast
15	All Plate Foreground Color Macro(overrides pixel values)		0 - 5	Disabled
			6 - 255	See Color Macros
16	All Plate Background Color Macro(overrides pixel values)		0 - 5	Disabled
			6 - 255	See Color Macros
17	Pixel 1	Red	0 - 255	
18		Green	0 - 255	
19		Blue	0 - 255	
20		Warm White	0 - 255	
21	Pixel 2	Red	0 - 255	
22		Green	0 - 255	
23		Blue	0 - 255	
24		Warm White	0 - 255	
25	Pixel 3	Red	0 - 255	
26		Green	0 - 255	
27		Blue	0 - 255	
28		Warm White	0 - 255	
29	Pixel 4	Red	0 - 255	
30		Green	0 - 255	
31		Blue	0 - 255	
32		Warm White	0 - 255	
33	Pixel 5	Red	0 - 255	
34		Green	0 - 255	
35		Blue	0 - 255	
36		Warm White	0 - 255	
37	Pixel 6	Red	0 - 255	
38		Green	0 - 255	
39		Blue	0 - 255	
40		Warm White	0 - 255	
41	Pixel 7	Red	0 - 255	
42		Green	0 - 255	
43		Blue	0 - 255	
44		Warm White	0 - 255	
45	Pixel 8	Red	0 - 255	
46		Green	0 - 255	
47		Blue	0 - 255	
48		Warm White	0 - 255	
49	Pixel 9	Red	0 - 255	
50		Green	0 - 255	
51		Blue	0 - 255	
52		Warm White	0 - 255	
53	Pixel 10	Red	0 - 255	

54		Green	0 - 255	
55		Blue	0 - 255	
56		Warm White	0 - 255	
57	Pixel 11	Red	0 - 255	
58		Green	0 - 255	
59		Blue	0 - 255	
60		Warm White	0 - 255	
61	Pixel 12	Red	0 - 255	
62		Green	0 - 255	
63		Blue	0 - 255	
64		Warm White	0 - 255	
65	Beam Pixel W1		0 - 255	
66	Beam Pixel W2		0 - 255	
67	Beam Pixel W3		0 - 255	
68	Beam Pixel W4		0 - 255	
69	Beam Pixel W5		0 - 255	
70	Beam Pixel W6		0 - 255	
71	Beam Pixel W7		0 - 255	
72	Beam Pixel W8		0 - 255	
76	Beam Pixel W9		0 - 255	
74	Beam Pixel W10		0 - 255	
75	Beam Pixel W11		0 - 255	
76	Beam Pixel W12		0 - 255	

112CH Mode

Channel	Parameter	Value	Function
1	Tilt	0 - 255	
2	Tilt Fine	0 - 255	
3	Tilt Speed	0 - 255	
4	Control (5s Activation Delay)	0 - 5	No Function
		6 - 9	Default Dimmner (Linear)
		10 - 14	Square Law Dimmer
		15 - 19	Square Inverse Dimmer
		20 - 24	S-Curve Law Dimmer
		25 - 29	Dimmer Speed Fast
		30 - 34	Dimmer Speed Smmoth
		35 - 39	LED Frequency 400Hz
		40 - 44	LED Frequency 1200Hz
		45 - 49	LED Frequency 2000Hz
		50 - 54	LED Frequency 4000Hz
		55 - 59	LED Frequency 6000Hz
		60 - 64	LED Frequency 8000Hz
		65 - 69	LED Frequency 16000Hz
		70 - 74	LED Frequency 20000Hz
		75 - 79	Fan Mode - Auto
		80 - 84	Fan Mode - Quiet
		85 - 89	Fan Mode - Performance
		90 - 94	LED Remap No

			95 - 99	LED Remap Yse
			100 -199	No Function
			200 - 220	Reset Tilt
			221 - 255	Reset All
5	Master Dimmer		0 - 255	
6	Master Dimmer Fine (16-Bit)		0 - 255	
7	Plate Shutter / Strobe		0 - 5	Open (Default)
			6 - 55	Synchronus Strobe Rate (Slow-to-Fast)
			56 - 125	Pulse Strobe (Slow-to-Fast)
			126 - 189	Random Strobe (Slow-to-Fast)
			190 - 255	Open
8	Plate Flash Duration		0 - 5	Disabled
			6 - 245	7 - 650ms
			246 - 255	Disabled
9	Beam Shutter / Strobe		0 - 5	Open (Default)
			6 - 55	Synchronus Strobe Rate (Slow-to-Fast)
			56 - 125	Pulse Strobe (Slow-to-Fast)
			126 - 189	Random Strobe (Slow-to-Fast)
			190 - 255	Open
10	Beam Flash Duration		0 - 5	Disabled
			6 - 245	7 - 650ms
			246 - 255	Disabled
11	All Beam Macro FX (overrides pixel values)		0 - 5	Disabled
			6 - 255	See Beam Patterns
12	All Beam Macro FX Speed		0 - 255	Slow to Fast
13	Pixel 1	Red	0 - 255	
14		Green	0 - 255	
15		Blue	0 - 255	
16		Warm White	0 - 255	
17	Pixel 2	Red	0 - 255	
18		Green	0 - 255	
19		Blue	0 - 255	
20		Warm White	0 - 255	
21	Pixel 3	Red	0 - 255	
22		Green	0 - 255	
23		Blue	0 - 255	
24		Warm White	0 - 255	
25	Pixel 4	Red	0 - 255	
26		Green	0 - 255	
27		Blue	0 - 255	
28		Warm White	0 - 255	
29	Pixel 5	Red	0 - 255	
30		Green	0 - 255	
31		Blue	0 - 255	
32		Warm White	0 - 255	
33	Pixel 6	Red	0 - 255	
34		Green	0 - 255	
35		Blue	0 - 255	
36		Warm White	0 - 255	
37	Pixel 7	Red	0 - 255	
38		Green	0 - 255	
39		Blue	0 - 255	
40		Warm White	0 - 255	

41	Pixel 8	Red	0 - 255	
42		Green	0 - 255	
43		Blue	0 - 255	
44		Warm White	0 - 255	
45	Pixel 9	Red	0 - 255	
46		Green	0 - 255	
47		Blue	0 - 255	
48		Warm White	0 - 255	
49	Pixel 10	Red	0 - 255	
50		Green	0 - 255	
51		Blue	0 - 255	
52		Warm White	0 - 255	
53	Pixel 11	Red	0 - 255	
54		Green	0 - 255	
55		Blue	0 - 255	
56		Warm White	0 - 255	
57	Pixel 12	Red	0 - 255	
58		Green	0 - 255	
59		Blue	0 - 255	
60		Warm White	0 - 255	
61	Pixel 13	Red	0 - 255	
62		Green	0 - 255	
63		Blue	0 - 255	
64		Warm White	0 - 255	
65	Pixel 14	Red	0 - 255	
66		Green	0 - 255	
67		Blue	0 - 255	
68		Warm White	0 - 255	
69	Pixel 15	Red	0 - 255	
70		Green	0 - 255	
71		Blue	0 - 255	
72		Warm White	0 - 255	
73	Pixel 16	Red	0 - 255	
74		Green	0 - 255	
75		Blue	0 - 255	
76		Warm White	0 - 255	
77	Pixel 17	Red	0 - 255	
78		Green	0 - 255	
79		Blue	0 - 255	
80		Warm White	0 - 255	
81	Pixel 18	Red	0 - 255	
82		Green	0 - 255	
83		Blue	0 - 255	
84		Warm White	0 - 255	
85	Pixel 19	Red	0 - 255	
86		Green	0 - 255	
87		Blue	0 - 255	
88		Warm White	0 - 255	
89	Pixel 20	Red	0 - 255	
90		Green	0 - 255	
91		Blue	0 - 255	
92		Warm White	0 - 255	
93	Pixel 21	Red	0 - 255	
94		Green	0 - 255	

95		Blue	0 - 255	
96		Warm White	0 - 255	
97	Pixel 22	Red	0 - 255	
98		Green	0 - 255	
99		Blue	0 - 255	
100		Warm White	0 - 255	
101	Pixel 23	Red	0 - 255	
102		Green	0 - 255	
103		Blue	0 - 255	
104		Warm White	0 - 255	
105	Pixel 24	Red	0 - 255	
106		Green	0 - 255	
107		Blue	0 - 255	
108		Warm White	0 - 255	
109	Beam Pixel W1		0 - 255	
110	Beam Pixel W2		0 - 255	
111	Beam Pixel W3		0 - 255	
112	Beam Pixel W4		0 - 255	

114CH Mode

Channel	Parameter	Value	Function
1	Tilt	0 - 255	
2	Tilt Fine	0 - 255	
3	Tilt Speed	0 - 255	
4	Control (5s Activation Delay)	0 - 5	No Function
		6 - 9	Default Dimmner (Linear)
		10 - 14	Square Law Dimmer
		15 - 19	Square Inverse Dimmer
		20 - 24	S-Curve Law Dimmer
		25 - 29	Dimmer Speed Fast
		30 - 34	Dimmer Speed Smmoth
		35 - 39	LED Frequency 400Hz
		40 - 44	LED Frequency 1200Hz
		45 - 49	LED Frequency 2000Hz
		50 - 54	LED Frequency 4000Hz
		55 - 59	LED Frequency 6000Hz
		60 - 64	LED Frequency 8000Hz
		65 - 69	LED Frequency 16000Hz
		70 - 74	LED Frequency 20000Hz
		75 - 79	Fan Mode - Auto
		80 - 84	Fan Mode - Quiet
		85 - 89	Fan Mode - Performance
		90 - 94	LED Remap No
		95 - 99	LED Remap Yse
		100 -199	No Function
		200 - 220	Reset Tilt
		221 - 255	Reset All
5	Master Dimmer	0 - 255	
6	Master Dimmer Fine (16-Bit)	0 - 255	
7	Plate Shutter / Strobe	0 - 5	Open (Default)
		6 - 55	Synchronus Strobe Rate (Slow-to-Fast)
		56 - 125	Pulse Strobe (Slow-to-Fast)

		126 - 189	Random Strobe (Slow-to-Fast)
		190 - 255	Open
8	Plate Flash Duration	0 - 5	Disabled
		6 - 245	7 - 650ms
		246 - 255	Disabled
9	Beam Shutter / Strobe	0 - 5	Open (Default)
		6 - 55	Synchronus Strobe Rate (Slow-to-Fast)
		56 - 125	Pulse Strobe (Slow-to-Fast)
		126 - 189	Random Strobe (Slow-to-Fast)
		190 - 255	Open
10	Beam Flash Duration	0 - 5	Disabled
		6 - 245	7 - 650ms
		246 - 255	Disabled
11	Red	0 - 255	
12	Green	0 - 255	
13	Blue	0 - 255	
14	Warm White	0 - 255	
15	Plate 1 Macro FX	0 - 5	Disabled
		6 - 255	See Plate Patterns
16	Plate 1 Macro FX Speed	0 - 255	Slow to Fast
17	Plate 1 Foreground Color Macro	0 - 5	Disabled
		6 - 255	See Color Macros
18	Plate 1 Background Color Macro	0 - 5	Disabled
		6 - 255	See Color Macros
19	Beam Pixel W1	0 - 255	
20	Beam Pixel W2	0 - 255	
21	Beam Pixel W3	0 - 255	
22	Beam Pixel W4	0 - 255	
23	Beam Pixel W5	0 - 255	
24	Beam Pixel W6	0 - 255	
25	Beam Pixel W7	0 - 255	
26	Beam Pixel W8	0 - 255	
27	Beam Pixel W9	0 - 255	
28	Beam Pixel W10	0 - 255	
29	Beam Pixel W11	0 - 255	
30	Beam Pixel W12	0 - 255	
31	Beam Pixel W13	0 - 255	
32	Beam Pixel W14	0 - 255	
33	Beam Pixel W15	0 - 255	
34	Beam Pixel W16	0 - 255	
35	Beam Pixel W17	0 - 255	
36	Beam Pixel W18	0 - 255	
37	Beam Pixel W19	0 - 255	
38	Beam Pixel W20	0 - 255	
39	Beam Pixel W21	0 - 255	
40	Beam Pixel W22	0 - 255	
41	Beam Pixel W23	0 - 255	
42	Beam Pixel W24	0 - 255	
43	Beam Pixel W25	0 - 255	
44	Beam Pixel W26	0 - 255	
45	Beam Pixel W27	0 - 255	
46	Beam Pixel W28	0 - 255	
47	Beam Pixel W29	0 - 255	
48	Beam Pixel W30	0 - 255	

49	Beam Pixel W31	0 - 255	
50	Beam Pixel W32	0 - 255	
51	Beam Pixel W33	0 - 255	
52	Beam Pixel W34	0 - 255	
53	Beam Pixel W35	0 - 255	
54	Beam Pixel W36	0 - 255	
55	Beam Pixel W37	0 - 255	
56	Beam Pixel W38	0 - 255	
57	Beam Pixel W39	0 - 255	
58	Beam Pixel W40	0 - 255	
59	Beam Pixel W41	0 - 255	
60	Beam Pixel W42	0 - 255	
61	Beam Pixel W43	0 - 255	
62	Beam Pixel W44	0 - 255	
63	Beam Pixel W45	0 - 255	
64	Beam Pixel W46	0 - 255	
65	Beam Pixel W47	0 - 255	
66	Beam Pixel W48	0 - 255	
67	Beam Pixel W49	0 - 255	
68	Beam Pixel W50	0 - 255	
69	Beam Pixel W51	0 - 255	
70	Beam Pixel W52	0 - 255	
71	Beam Pixel W53	0 - 255	
72	Beam Pixel W54	0 - 255	
73	Beam Pixel W55	0 - 255	
74	Beam Pixel W56	0 - 255	
75	Beam Pixel W57	0 - 255	
76	Beam Pixel W58	0 - 255	
77	Beam Pixel W59	0 - 255	
78	Beam Pixel W60	0 - 255	
79	Beam Pixel W61	0 - 255	
80	Beam Pixel W62	0 - 255	
81	Beam Pixel W63	0 - 255	
82	Beam Pixel W64	0 - 255	
83	Beam Pixel W65	0 - 255	
84	Beam Pixel W66	0 - 255	
85	Beam Pixel W67	0 - 255	
86	Beam Pixel W68	0 - 255	
87	Beam Pixel W69	0 - 255	
88	Beam Pixel W70	0 - 255	
89	Beam Pixel W71	0 - 255	
90	Beam Pixel W72	0 - 255	
91	Beam Pixel W73	0 - 255	
92	Beam Pixel W74	0 - 255	
93	Beam Pixel W75	0 - 255	
94	Beam Pixel W76	0 - 255	
95	Beam Pixel W77	0 - 255	
96	Beam Pixel W78	0 - 255	
97	Beam Pixel W79	0 - 255	
98	Beam Pixel W80	0 - 255	
99	Beam Pixel W81	0 - 255	
100	Beam Pixel W82	0 - 255	
101	Beam Pixel W83	0 - 255	
102	Beam Pixel W84	0 - 255	

103	Beam Pixel W85	0 - 255	
104	Beam Pixel W86	0 - 255	
105	Beam Pixel W87	0 - 255	
106	Beam Pixel W88	0 - 255	
107	Beam Pixel W89	0 - 255	
108	Beam Pixel W90	0 - 255	
109	Beam Pixel W91	0 - 255	
110	Beam Pixel W92	0 - 255	
111	Beam Pixel W93	0 - 255	
112	Beam Pixel W94	0 - 255	
113	Beam Pixel W95	0 - 255	
114	Beam Pixel W96	0 - 255	

138CH Mode

Channel	Parameter	Value	Function
1	Tilt	0 - 255	
2	Tilt Fine	0 - 255	
3	Tilt Speed	0 - 255	
4	Control (5s Activation Delay)	0 - 5	No Function
		6 - 9	Default Dimmner (Linear+D14:D29)
		10 - 14	Square Law Dimmer
		15 - 19	Square Inverse Dimmer
		20 - 24	S-Curve Law Dimmer
		25 - 29	Dimmer Speed Fast
		30 - 34	Dimmer Speed Smmoth
		35 - 39	LED Frequency 400Hz
		40 - 44	LED Frequency 1200Hz
		45 - 49	LED Frequency 2000Hz
		50 - 54	LED Frequency 4000Hz
		55 - 59	LED Frequency 6000Hz
		60 - 64	LED Frequency 8000Hz
		65 - 69	LED Frequency 16000Hz
		70 - 74	LED Frequency 20000Hz
		75 - 79	Fan Mode - Auto
		80 - 84	Fan Mode - Quiet
		85 - 89	Fan Mode - Performance
		90 - 94	LED Remap No
		95 - 99	LED Remap Yse
		100 -199	No Function
		200 - 220	Reset Tilt
		221 - 255	Reset All
5	Master Dimmer	0 - 255	
6	Master Dimmer Fine (16-Bit)	0 - 255	
7	Plate Shutter / Strobe	0 - 5	Open (Default)
		6 - 55	Synchronus Strobe Rate (Slow-to-Fast)
		56 - 125	Pulse Strobe (Slow-to-Fast)
		126 - 189	Random Strobe (Slow-to-Fast)
		190 - 255	Open
8	Plate Flash Duration	0 - 5	Disabled

			6 - 245	7 - 650ms
			246 - 255	Disabled
9	Beam Shutter / Strobe		0 - 5	Open (Default)
			6 - 55	Synchronus Strobe Rate (Slow-to-Fast)
			56 - 125	Pulse Strobe (Slow-to-Fast)
			126 - 189	Random Strobe (Slow-to-Fast)
			190 - 255	Open
10	Beam Flash Duration		0 - 5	Disabled
			6 - 245	7 - 650ms
			246 - 255	Disabled
11	Pixel 1	Red	0 - 255	
12		Green	0 - 255	
13		Blue	0 - 255	
14		Warm White	0 - 255	
15	Pixel 2	Red	0 - 255	
16		Green	0 - 255	
17		Blue	0 - 255	
18		Warm White	0 - 255	
19	Pixel 3	Red	0 - 255	
20		Green	0 - 255	
21		Blue	0 - 255	
22		Warm White	0 - 255	
23	Pixel 4	Red	0 - 255	
24		Green	0 - 255	
25		Blue	0 - 255	
26		Warm White	0 - 255	
27	Pixel 5	Red	0 - 255	
28		Green	0 - 255	
29		Blue	0 - 255	
30		Warm White	0 - 255	
31	Pixel 6	Red	0 - 255	
32		Green	0 - 255	
33		Blue	0 - 255	
34		Warm White	0 - 255	
35	Pixel 7	Red	0 - 255	
36		Green	0 - 255	
37		Blue	0 - 255	
38		Warm White	0 - 255	
39	Pixel 8	Red	0 - 255	
40		Green	0 - 255	
41		Blue	0 - 255	
42		Warm White	0 - 255	
43	Pixel 9	Red	0 - 255	
44		Green	0 - 255	
45		Blue	0 - 255	
46		Warm White	0 - 255	
47	Pixel 10	Red	0 - 255	
48		Green	0 - 255	
49		Blue	0 - 255	
50		Warm White	0 - 255	
51	Pixel 11	Red	0 - 255	
52		Green	0 - 255	
53		Blue	0 - 255	
54		Warm White	0 - 255	

55	Pixel 12	Red	0 - 255	
56		Green	0 - 255	
57		Blue	0 - 255	
58		Warm White	0 - 255	
59	Pixel 13	Red	0 - 255	
60		Green	0 - 255	
61		Blue	0 - 255	
62		Warm White	0 - 255	
63	Pixel 14	Red	0 - 255	
64		Green	0 - 255	
65		Blue	0 - 255	
66		Warm White	0 - 255	
67	Pixel 15	Red	0 - 255	
68		Green	0 - 255	
69		Blue	0 - 255	
70		Warm White	0 - 255	
71	Pixel 16	Red	0 - 255	
72		Green	0 - 255	
73		Blue	0 - 255	
74		Warm White	0 - 255	
75	Pixel 17	Red	0 - 255	
76		Green	0 - 255	
77		Blue	0 - 255	
78		Warm White	0 - 255	
79	Pixel 18	Red	0 - 255	
80		Green	0 - 255	
81		Blue	0 - 255	
82		Warm White	0 - 255	
83	Pixel 19	Red	0 - 255	
84		Green	0 - 255	
85		Blue	0 - 255	
86		Warm White	0 - 255	
87	Pixel 20	Red	0 - 255	
88		Green	0 - 255	
89		Blue	0 - 255	
90		Warm White	0 - 255	
91	Pixel 21	Red	0 - 255	
92		Green	0 - 255	
93		Blue	0 - 255	
94		Warm White	0 - 255	
95	Pixel 22	Red	0 - 255	
96		Green	0 - 255	
97		Blue	0 - 255	
98		Warm White	0 - 255	
99	Pixel 23	Red	0 - 255	
100		Green	0 - 255	
101		Blue	0 - 255	
102		Warm White	0 - 255	
103	Pixel 24	Red	0 - 255	
104		Green	0 - 255	
105		Blue	0 - 255	
106		Warm White	0 - 255	
107	Beam Pixel W1		0 - 255	
108	Beam Pixel W2		0 - 255	

109	Beam Pixel W3	0 - 255	
110	Beam Pixel W4	0 - 255	
111	Beam Pixel W5	0 - 255	
112	Beam Pixel W6	0 - 255	
113	Beam Pixel W7	0 - 255	
114	Beam Pixel W8	0 - 255	
115	Beam Pixel W9	0 - 255	
116	Beam Pixel W10	0 - 255	
117	Beam Pixel W11	0 - 255	
118	Beam Pixel W12	0 - 255	
119	Beam Pixel W13	0 - 255	
120	Beam Pixel W14	0 - 255	
121	Beam Pixel W15	0 - 255	
122	Beam Pixel W16	0 - 255	
123	Beam Pixel W17	0 - 255	
124	Beam Pixel W18	0 - 255	
125	Beam Pixel W19	0 - 255	
126	Beam Pixel W20	0 - 255	
127	Beam Pixel W21	0 - 255	
128	Beam Pixel W22	0 - 255	
129	Beam Pixel W23	0 - 255	
130	Beam Pixel W24	0 - 255	
131	Beam Pixel W25	0 - 255	
132	Beam Pixel W26	0 - 255	
133	Beam Pixel W27	0 - 255	
134	Beam Pixel W28	0 - 255	
135	Beam Pixel W29	0 - 255	
136	Beam Pixel W30	0 - 255	
137	Beam Pixel W31	0 - 255	
138	Beam Pixel W32	0 - 255	

208CH Mode

Channel	Parameter	Value	Function
1	Tilt	0 - 255	
2	Tilt Fine	0 - 255	
3	Tilt Speed	0 - 255	
4	Control (5s Activation Delay)	0 - 5	No Function
		6 - 9	Default Dimmner (Linear+D14:D29)
		10 - 14	Square Law Dimmer
		15 - 19	Square Inverse Dimmer
		20 - 24	S-Curve Law Dimmer
		25 - 29	Dimmer Speed Fast
		30 - 34	Dimmer Speed Smmoth
		35 - 39	LED Frequency 400Hz
		40 - 44	LED Frequency 1200Hz

			45 - 49	LED Frequency 2000Hz
			50 - 54	LED Frequency 4000Hz
			55 - 59	LED Frequency 6000Hz
			60 - 64	LED Frequency 8000Hz
			65 - 69	LED Frequency 16000Hz
			70 - 74	LED Frequency 20000Hz
			75 - 79	Fan Mode - Auto
			80 - 84	Fan Mode - Quiet
			85 - 89	Fan Mode - Performance
			90 - 94	LED Remap No
			95 - 99	LED Remap Yse
			100 -199	No Function
			200 - 220	Reset Tilt
			221 - 255	Reset All
5	Master Dimmer		0 - 255	
6	Master Dimmer Fine (16-Bit)		0 - 255	
7	Plate Shutter / Strobe		0 - 5	Open (Default)
			6 - 55	Synchronus Strobe Rate (Slow-to-Fast)
			56 - 125	Pulse Strobe (Slow-to-Fast)
			126 - 189	Random Strobe (Slow-to-Fast)
			190 - 255	Open
8	Plate Flash Duration		0 - 5	Disabled
			6 - 245	7 - 650ms
			246 - 255	Disabled
9	Beam Shutter / Strobe		0 - 5	Open (Default)
			6 - 55	Synchronus Strobe Rate (Slow-to-Fast)
			56 - 125	Pulse Strobe (Slow-to-Fast)
			126 - 189	Random Strobe (Slow-to-Fast)
			190 - 255	Open
10	Beam Flash Duration		0 - 5	Disabled
			6 - 245	7 - 650ms
			246 - 255	Disabled
11	All Beam Macro FX (overrides pixel values)		0 - 5	Disabled
			6 - 255	See Beam Patterns
12	All Beam Macro FX Speed		0 - 255	Slow to Fast
13	All Plate Macro FX (overrides pixel values)		0 - 5	Disabled
			6 - 255	See Plate Patterns
14	All Plate Macro FX Speed		0 - 255	Slow to Fast
15	All Plate Foreground Color Macro (overrides pixel values)		0 - 5	Disabled
			6 - 255	See Color Macros
16	All Plate Background Color Macro (overrides pixel values)		0 - 5	Disabled
			6 - 255	See Color Macros
17	Pixel 1	Red	0 - 255	
18		Green	0 - 255	
19		Blue	0 - 255	
20		Warm White	0 - 255	
21	Pixel 2	Red	0 - 255	
22		Green	0 - 255	

23		Blue	0 - 255	
24		Warm White	0 - 255	
25	Pixel 3	Red	0 - 255	
26		Green	0 - 255	
27		Blue	0 - 255	
28		Warm White	0 - 255	
29	Pixel 4	Red	0 - 255	
30		Green	0 - 255	
31		Blue	0 - 255	
32		Warm White	0 - 255	
33	Pixel 5	Red	0 - 255	
34		Green	0 - 255	
35		Blue	0 - 255	
36		Warm White	0 - 255	
37	Pixel 6	Red	0 - 255	
38		Green	0 - 255	
39		Blue	0 - 255	
40		Warm White	0 - 255	
41	Pixel 7	Red	0 - 255	
42		Green	0 - 255	
43		Blue	0 - 255	
44		Warm White	0 - 255	
45	Pixel 8	Red	0 - 255	
46		Green	0 - 255	
47		Blue	0 - 255	
48		Warm White	0 - 255	
49	Pixel 9	Red	0 - 255	
50		Green	0 - 255	
51		Blue	0 - 255	
52		Warm White	0 - 255	
53	Pixel 10	Red	0 - 255	
54		Green	0 - 255	
55		Blue	0 - 255	
56		Warm White	0 - 255	
57	Pixel 11	Red	0 - 255	
58		Green	0 - 255	
59		Blue	0 - 255	
60		Warm White	0 - 255	
61	Pixel 12	Red	0 - 255	
62		Green	0 - 255	
63		Blue	0 - 255	
64		Warm White	0 - 255	
65	Pixel 13	Red	0 - 255	
66		Green	0 - 255	
67		Blue	0 - 255	
68		Warm White	0 - 255	
69	Pixel 14	Red	0 - 255	
70		Green	0 - 255	
71		Blue	0 - 255	
72		Warm White	0 - 255	
73	Pixel 15	Red	0 - 255	
74		Green	0 - 255	
75		Blue	0 - 255	
76		Warm White	0 - 255	

77	Pixel 16	Red	0 - 255	
78		Green	0 - 255	
79		Blue	0 - 255	
80		Warm White	0 - 255	
81	Pixel 17	Red	0 - 255	
82		Green	0 - 255	
83		Blue	0 - 255	
84		Warm White	0 - 255	
85	Pixel 18	Red	0 - 255	
86		Green	0 - 255	
87		Blue	0 - 255	
88		Warm White	0 - 255	
89	Pixel 19	Red	0 - 255	
90		Green	0 - 255	
91		Blue	0 - 255	
92		Warm White	0 - 255	
93	Pixel 20	Red	0 - 255	
94		Green	0 - 255	
95		Blue	0 - 255	
96		Warm White	0 - 255	
97	Pixel 21	Red	0 - 255	
98		Green	0 - 255	
99		Blue	0 - 255	
100		Warm White	0 - 255	
101	Pixel 22	Red	0 - 255	
102		Green	0 - 255	
103		Blue	0 - 255	
104		Warm White	0 - 255	
105	Pixel 23	Red	0 - 255	
106		Green	0 - 255	
107		Blue	0 - 255	
108		Warm White	0 - 255	
109	Pixel 24	Red	0 - 255	
110		Green	0 - 255	
111		Blue	0 - 255	
112		Warm White	0 - 255	
113	Beam Pixel W1		0 - 255	
114	Beam Pixel W2		0 - 255	
115	Beam Pixel W3		0 - 255	
116	Beam Pixel W4		0 - 255	
117	Beam Pixel W5		0 - 255	
118	Beam Pixel W6		0 - 255	
119	Beam Pixel W7		0 - 255	
120	Beam Pixel W8		0 - 255	
121	Beam Pixel W9		0 - 255	
122	Beam Pixel W10		0 - 255	
123	Beam Pixel W11		0 - 255	
124	Beam Pixel W12		0 - 255	
125	Beam Pixel W13		0 - 255	
126	Beam Pixel W14		0 - 255	
127	Beam Pixel W15		0 - 255	
128	Beam Pixel W16		0 - 255	
129	Beam Pixel W17		0 - 255	
130	Beam Pixel W18		0 - 255	

131	Beam Pixel W19	0 - 255	
132	Beam Pixel W20	0 - 255	
133	Beam Pixel W21	0 - 255	
134	Beam Pixel W22	0 - 255	
135	Beam Pixel W23	0 - 255	
136	Beam Pixel W24	0 - 255	
137	Beam Pixel W25	0 - 255	
138	Beam Pixel W26	0 - 255	
139	Beam Pixel W27	0 - 255	
140	Beam Pixel W28	0 - 255	
141	Beam Pixel W29	0 - 255	
142	Beam Pixel W30	0 - 255	
143	Beam Pixel W31	0 - 255	
144	Beam Pixel W32	0 - 255	
145	Beam Pixel W33	0 - 255	
146	Beam Pixel W34	0 - 255	
147	Beam Pixel W35	0 - 255	
148	Beam Pixel W36	0 - 255	
149	Beam Pixel W37	0 - 255	
150	Beam Pixel W38	0 - 255	
151	Beam Pixel W39	0 - 255	
152	Beam Pixel W40	0 - 255	
153	Beam Pixel W41	0 - 255	
154	Beam Pixel W42	0 - 255	
155	Beam Pixel W43	0 - 255	
156	Beam Pixel W44	0 - 255	
157	Beam Pixel W45	0 - 255	
158	Beam Pixel W46	0 - 255	
159	Beam Pixel W47	0 - 255	
160	Beam Pixel W48	0 - 255	
161	Beam Pixel W49	0 - 255	
162	Beam Pixel W50	0 - 255	
163	Beam Pixel W51	0 - 255	
164	Beam Pixel W52	0 - 255	
165	Beam Pixel W53	0 - 255	
166	Beam Pixel W54	0 - 255	
167	Beam Pixel W55	0 - 255	
168	Beam Pixel W56	0 - 255	
169	Beam Pixel W57	0 - 255	
170	Beam Pixel W58	0 - 255	
171	Beam Pixel W59	0 - 255	
172	Beam Pixel W60	0 - 255	
173	Beam Pixel W61	0 - 255	
174	Beam Pixel W62	0 - 255	
175	Beam Pixel W63	0 - 255	
176	Beam Pixel W64	0 - 255	
177	Beam Pixel W65	0 - 255	
178	Beam Pixel W66	0 - 255	
179	Beam Pixel W67	0 - 255	
180	Beam Pixel W68	0 - 255	
181	Beam Pixel W69	0 - 255	
182	Beam Pixel W70	0 - 255	
183	Beam Pixel W71	0 - 255	
184	Beam Pixel W72	0 - 255	

185	Beam Pixel W73	0 - 255	
186	Beam Pixel W74	0 - 255	
187	Beam Pixel W75	0 - 255	
188	Beam Pixel W76	0 - 255	
189	Beam Pixel W77	0 - 255	
190	Beam Pixel W78	0 - 255	
191	Beam Pixel W79	0 - 255	
192	Beam Pixel W80	0 - 255	
193	Beam Pixel W81	0 - 255	
194	Beam Pixel W82	0 - 255	
195	Beam Pixel W83	0 - 255	
196	Beam Pixel W84	0 - 255	
197	Beam Pixel W85	0 - 255	
198	Beam Pixel W86	0 - 255	
199	Beam Pixel W87	0 - 255	
200	Beam Pixel W88	0 - 255	
201	Beam Pixel W89	0 - 255	
202	Beam Pixel W90	0 - 255	
203	Beam Pixel W91	0 - 255	
204	Beam Pixel W92	0 - 255	
205	Beam Pixel W93	0 - 255	
206	Beam Pixel W94	0 - 255	
207	Beam Pixel W95	0 - 255	
208	Beam Pixel W96	0 - 255	

92CH Mode

Channel	Parameter	Value	Function
1	Tilt	0 - 255	
2	Tilt Fine	0 - 255	
3	All Beam Intensity	0 - 255	
4	Beam Flash Duration	0 - 255	7 - 650ms
5	Beam Flash Rate	0 - 9	Open (Default)
		10 - 250	Slow to Fast
		251 - 255	Open
6	All Beam Macro FX (overrides pixel values)	0 - 36	Disabled
		37 - 255	See Beam Patterns
7	Control (5s Activation Delay)	0 - 5	No Function
		6 - 9	Default Dimmner (Linear)
		10 - 14	Square Law Dimmer
		15 - 19	Square Inverse Dimmer
		20 - 24	S-Curve Law Dimmer
		25 - 29	Dimmer Speed Fast
		30 - 34	Dimmer Speed Smmoth
		35 - 39	LED Frequency 400Hz
		40 - 44	LED Frequency 1200Hz
		45 - 49	LED Frequency 2000Hz
		50 - 54	LED Frequency 4000Hz
		55 - 59	LED Frequency 6000Hz

			60 - 64	LED Frequency 8000Hz
			65 - 69	LED Frequency 16000Hz
			70 - 74	LED Frequency 20000Hz
			75 - 79	Fan Mode - Auto
			80 - 84	Fan Mode - Quiet
			85 - 89	Fan Mode - Performance
			90 - 199	No Function
			90 - 94	LED Remap No
			95 - 99	LED Remap Yse
			100 -199	No Function
			130 - 134	Reset All
8	Plate Dimmer		0 - 255	
9	Plate Flash Duration		0 - 255	7 - 650ms
10	Plate Flash Rate		0 - 9	Open (Default)
			10 - 250	Slow to Fast
			251 - 255	Open
11	Plate Macro FX (overrides pixel values)		0 - 36	0 - 360
			6 - 255	See plate Patterns
12	Center Plate Red		0 - 255	Slow to Fast
13	Center Plate Green		0 - 5	Disabled
14	Center Plate Blue		6 - 255	See Plate Patterns
15	Center Plate Warm White		0 - 255	Slow to Fast
16	Plate Color Macro FX Speed		0 - 255	Slow to Fast
17	Plate 1-6 Color Macro Select		0 - 255	See Color Macros
18	Plate 7-12 Color Macro Select		0 - 255	See Color Macros
19	Beam Macro FX Speed		0 - 255	Slow to Fast
20	Center Plate Dimmer		0 - 255	
21	Plate Pixel 1	Red	0 - 255	
22		Green	0 - 255	
23		Blue	0 - 255	
24		Warm White	0 - 255	
25	Plate Pixel 2	Red	0 - 255	
26		Green	0 - 255	
27		Blue	0 - 255	
28		Warm White	0 - 255	
29	Plate Pixel 3	Red	0 - 255	
30		Green	0 - 255	
31		Blue	0 - 255	
32		Warm White	0 - 255	
33	Plate Pixel 4	Red	0 - 255	
34		Green	0 - 255	
35		Blue	0 - 255	
36		Warm White	0 - 255	
37	Plate Pixel 5	Red	0 - 255	
38		Green	0 - 255	
39		Blue	0 - 255	
40		Warm White	0 - 255	
41	Plate Pixel 6	Red	0 - 255	
42		Green	0 - 255	
43		Blue	0 - 255	
44		Warm White	0 - 255	
45	Plate Pixel 7	Red	0 - 255	
46		Green	0 - 255	
47		Blue	0 - 255	

48		Warm White	0 - 255	
49	Plate Pixel 8	Red	0 - 255	
50		Green	0 - 255	
51		Blue	0 - 255	
52		Warm White	0 - 255	
53	Plate Pixel 9	Red	0 - 255	
54		Green	0 - 255	
55		Blue	0 - 255	
56		Warm White	0 - 255	
57	Plate Pixel 10	Red	0 - 255	
58		Green	0 - 255	
59		Blue	0 - 255	
60		Warm White	0 - 255	
61	Plate Pixel 11	Red	0 - 255	
62		Green	0 - 255	
63		Blue	0 - 255	
64		Warm White	0 - 255	
65	Plate Pixel 12	Red	0 - 255	
66		Green	0 - 255	
67		Blue	0 - 255	
68		Warm White	0 - 255	
69	Plate Pixel 13	Red	0 - 255	
70		Green	0 - 255	
71		Blue	0 - 255	
72		Warm White	0 - 255	
73	Plate Pixel 14	Red	0 - 255	
74		Green	0 - 255	
75		Blue	0 - 255	
76		Warm White	0 - 255	
77	Plate Pixel 15	Red	0 - 255	
78		Green	0 - 255	
79		Blue	0 - 255	
80		Warm White	0 - 255	
81	Plate Pixel 16	Red	0 - 255	
82		Green	0 - 255	
83		Blue	0 - 255	
84		Warm White	0 - 255	
85	Beam Pixel W1		0 - 255	
86	Beam Pixel W2		0 - 255	
87	Beam Pixel W3		0 - 255	
88	Beam Pixel W4		0 - 255	
89	Beam Pixel W5		0 - 255	
90	Beam Pixel W6		0 - 255	
91	Beam Pixel W7		0 - 255	
92	Beam Pixel W8		0 - 255	

SPECIFICATIONS

◆Light Source:
Strobe Panel LEDs: 1.6W RGBW 4in1 LEDs 864pcs , LED Segments: 24 (3 x 8)
Strobe Tube LEDs: 1W CW LEDs 576pcs , LED Segments: 96 (24 x 4)

◆Movement
Position Feedback: yes
Tilt (Degrees): 180°

◆Control
18/33/56/76/112/114/138/208/92 DMX Channel Modes
Display: Full Color 180° Reversible LCD Menu Display
Protocol: DMX, RDM, ArtNet, sACN
Cooling: Temperature controlled, Overheating protection

◆Effects
Dimmer: 0-100% electronic 16 - bit Dimming
Internal Effects: Preset CTO / LED Macro Effects

◆Connectors
Signal connection: Seetronic IP65 XLR 5-Pin or 3-Pin In/Out
Power Input: Seetronic powerCON TRUE1 In/Out

◆Operating Condtion
Mains: 100-240V AC / 50-60Hz
Consumption: 1200W/230V(Dynamic) 1800W/230V(Peak value @ strobe)
Ambient: -30°C ~ 45°C

◆Physical
Dimensions: 493 x 175 x 400mm
Weight: 14kg
Cooling Noiseless fan for forced air

◆IP Rated
IP65
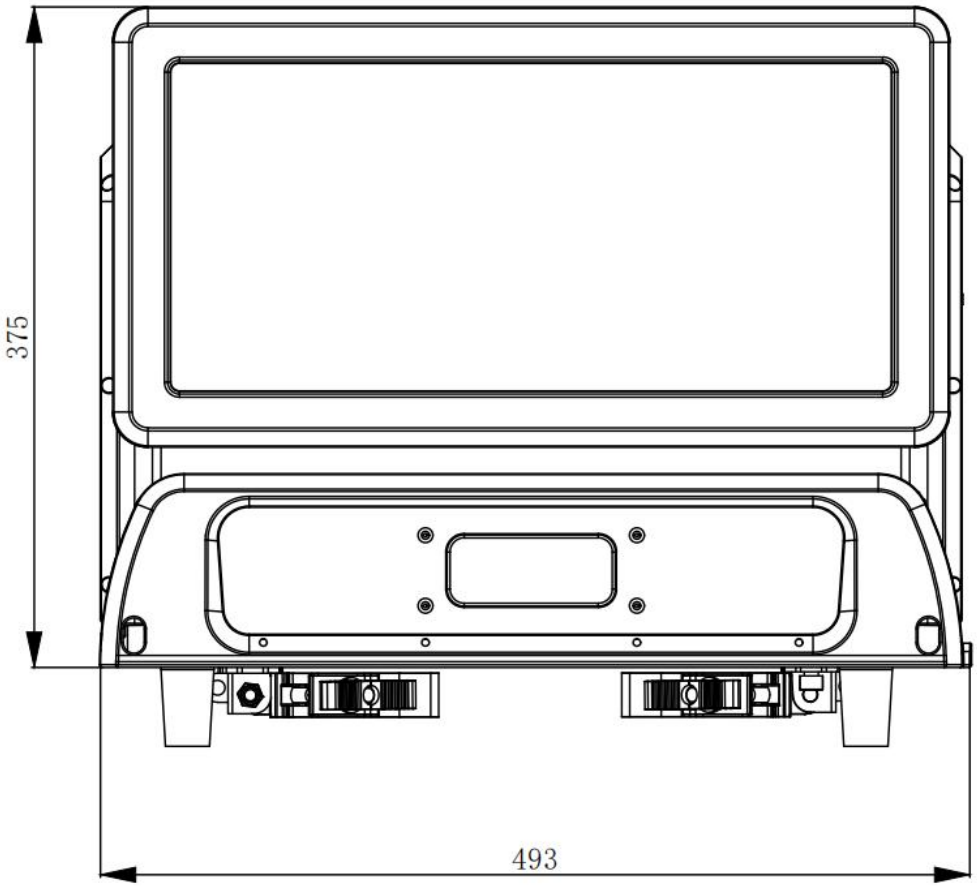
DIMENSIONAL DRAWINGS